US 20250319614A1

(19) United States
(12) Patent Application Publication
Stevens et al.
(10) Pub. No.: US 2025/0319614 A1
(43) Pub. Date: Oct. 16, 2025

(54) **LOWER ARM ASSEMBLY OF A ROBOT**

(71) Applicant: **Figure AI Inc.**, San Jose, CA (US)

(72) Inventors: **Michael Stevens**, San Jose, CA (US); **Jake Goldsmith**, San Jose, CA (US); **Steve Morfey**, San Jose, CA (US)

(21) Appl. No.: **19/249,517**

(22) Filed: **Jun. 25, 2025**

Related U.S. Application Data

(63) Continuation-in-part of application No. 19/173,793, filed on Apr. 8, 2025, now abandoned.

(60) Provisional application No. 63/575,887, filed on Apr. 8, 2024, provisional application No. 63/680,381, filed on Aug. 7, 2024.

Publication Classification

(51) **Int. Cl.**

B25J 18/00	(2006.01)
B25J 9/10	(2006.01)
B25J 15/00	(2006.01)
B62D 57/032	(2006.01)

(52) **U.S. Cl.**

CPC ***B25J 18/00*** (2013.01); ***B25J 9/1075*** (2013.01); ***B25J 15/0009*** (2013.01); ***B62D 57/032*** (2013.01)

(57) **ABSTRACT**

The disclosure presents a humanoid robot with an upper region (head, torso, arms with forearm assemblies, end effectors), lower region (legs), and connecting central region. Each end effector features index, middle, ring, little finger, and thumb assemblies attached to a housing of said end effector. The housing includes interior wall extents creating spaces for tendon routing, where the first distance between first and second wall extents is less than 45% of the second distance between third and fourth wall extents. Tendons controlling finger movements pass between these wall extents. The robot incorporates a wrist assembly connecting the housing of the end effector to the forearm, actuators housed in the forearm that control the tendons, and a carpal tunnel-like structure that guides tendons from forearm to base of the housing, enabling precise hand movements without requiring actuators in the hand itself.

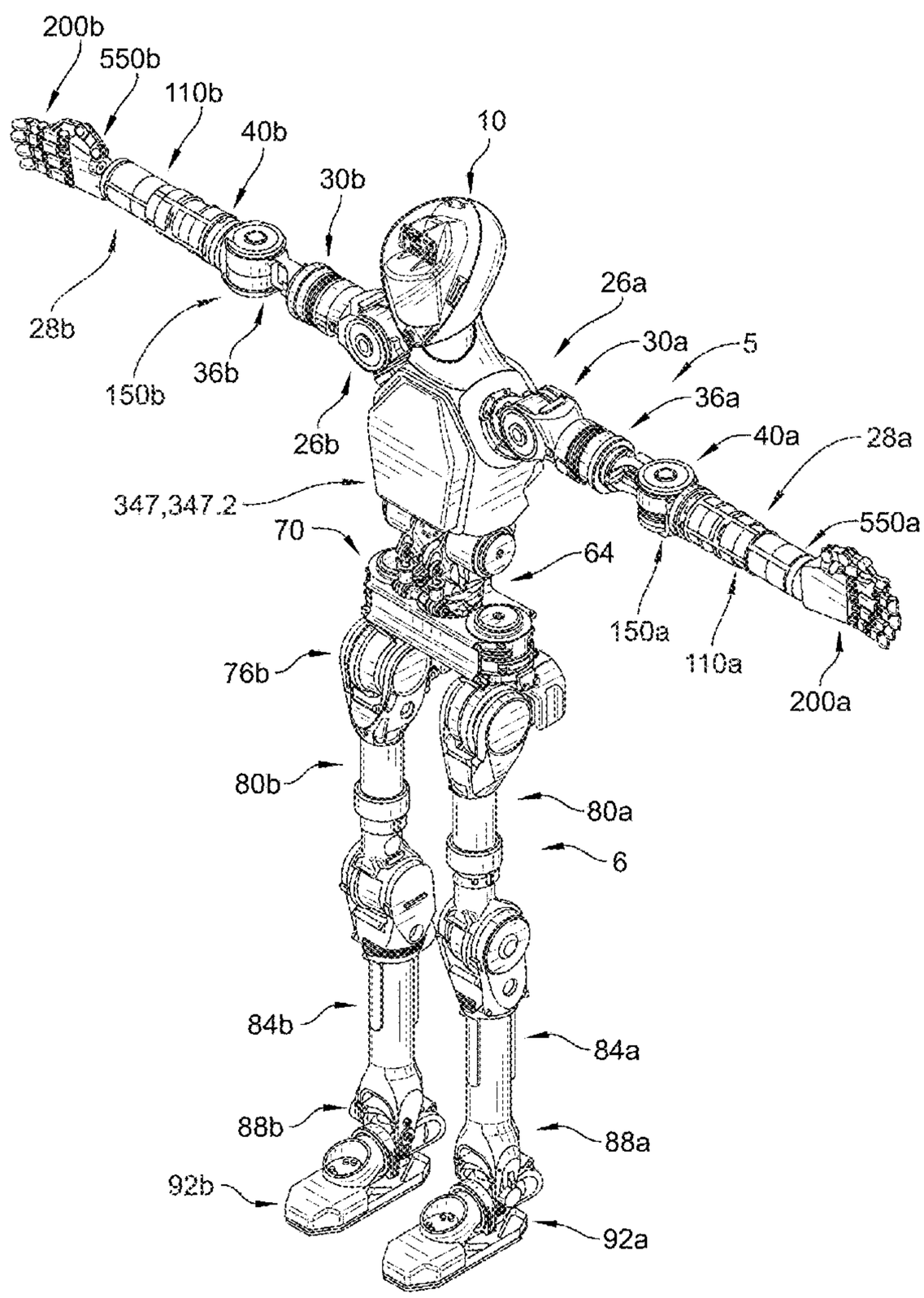

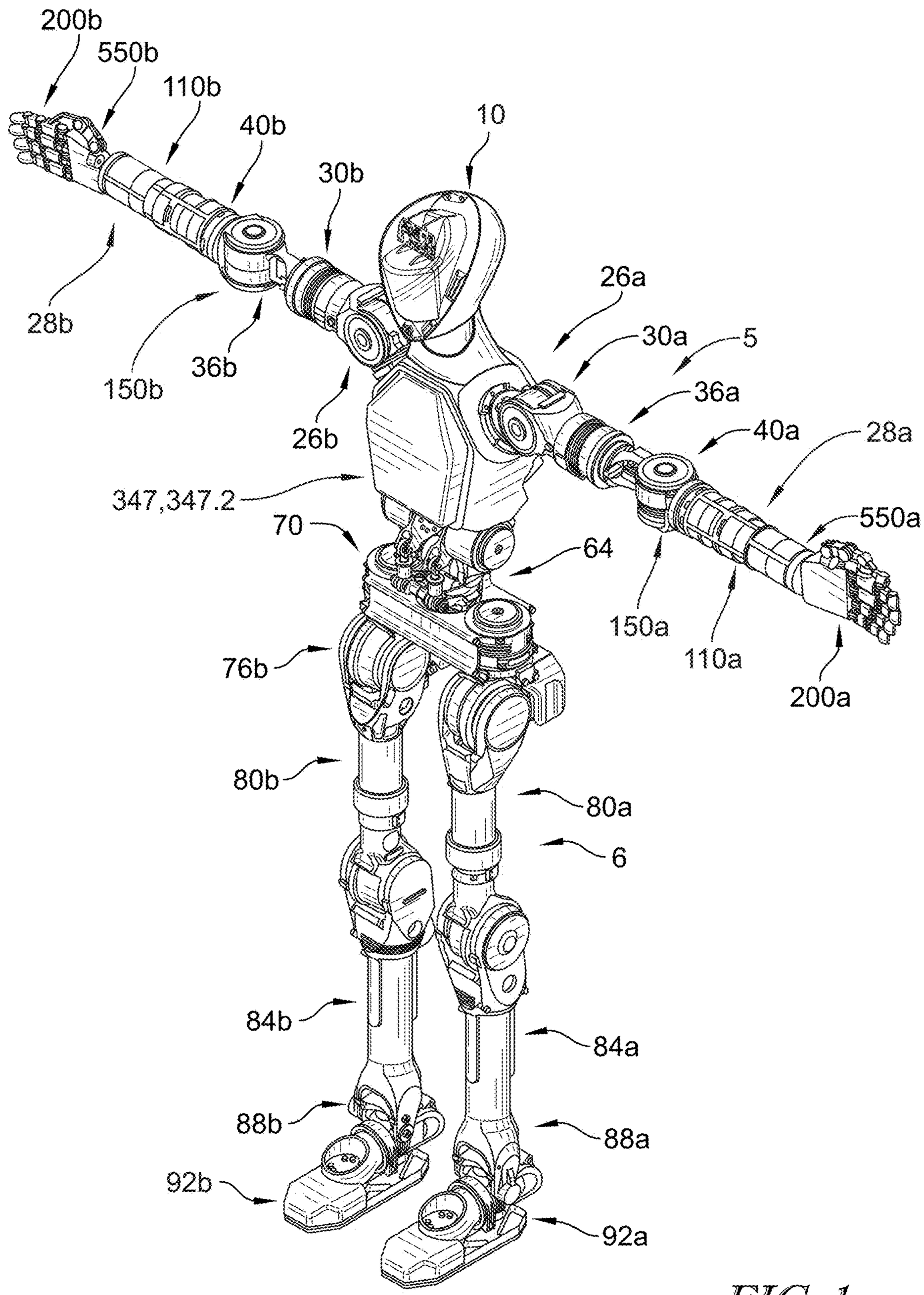
200b
550b
110b
40b
10
30b
28b
150b
36b
26b
26a
30a
5
36a
40a
28a
347,347.2
70
64
550a
150a
110a
200a
76b
80b
80a
6
84b
84a
88b
88a
92b
92a

FIG. 1

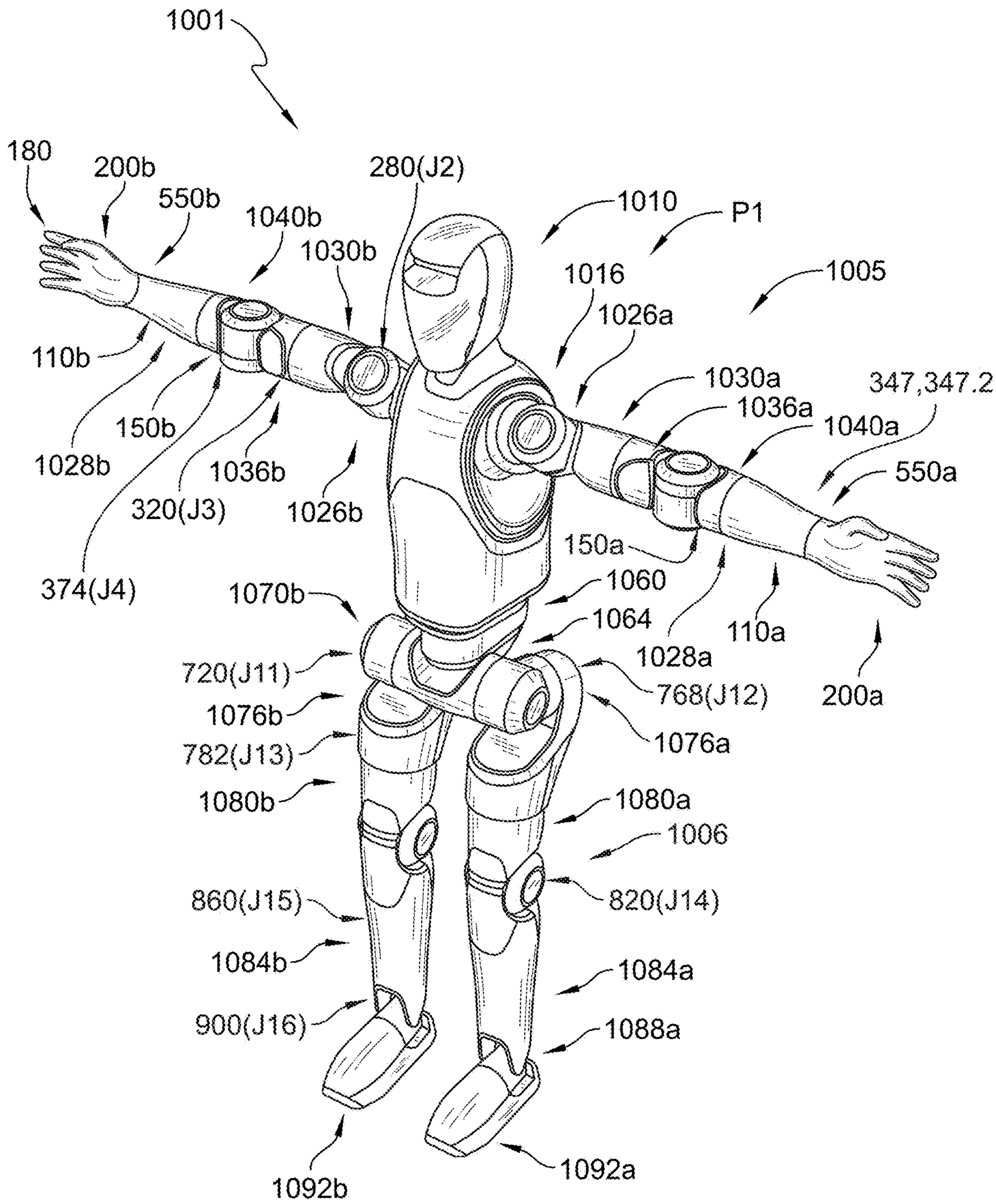
1001
180
200b
550b
1040b
1030b
280(J2)
1010
P1
1016
1005
1026a
110b
1030a
347,347.2
1036a
1040a
150b
1028b
1036b
550a
320(J3)
1026b
150a
374(J4)
1060
1070b
1064
110a
1028a
720(J11)
768(J12)
200a
1076b
1076a
782(J13)
1080b
1080a
1006
860(J15)
820(J14)
1084b
1084a
900(J16)
1088a
1092b
1092a

FIG. 2

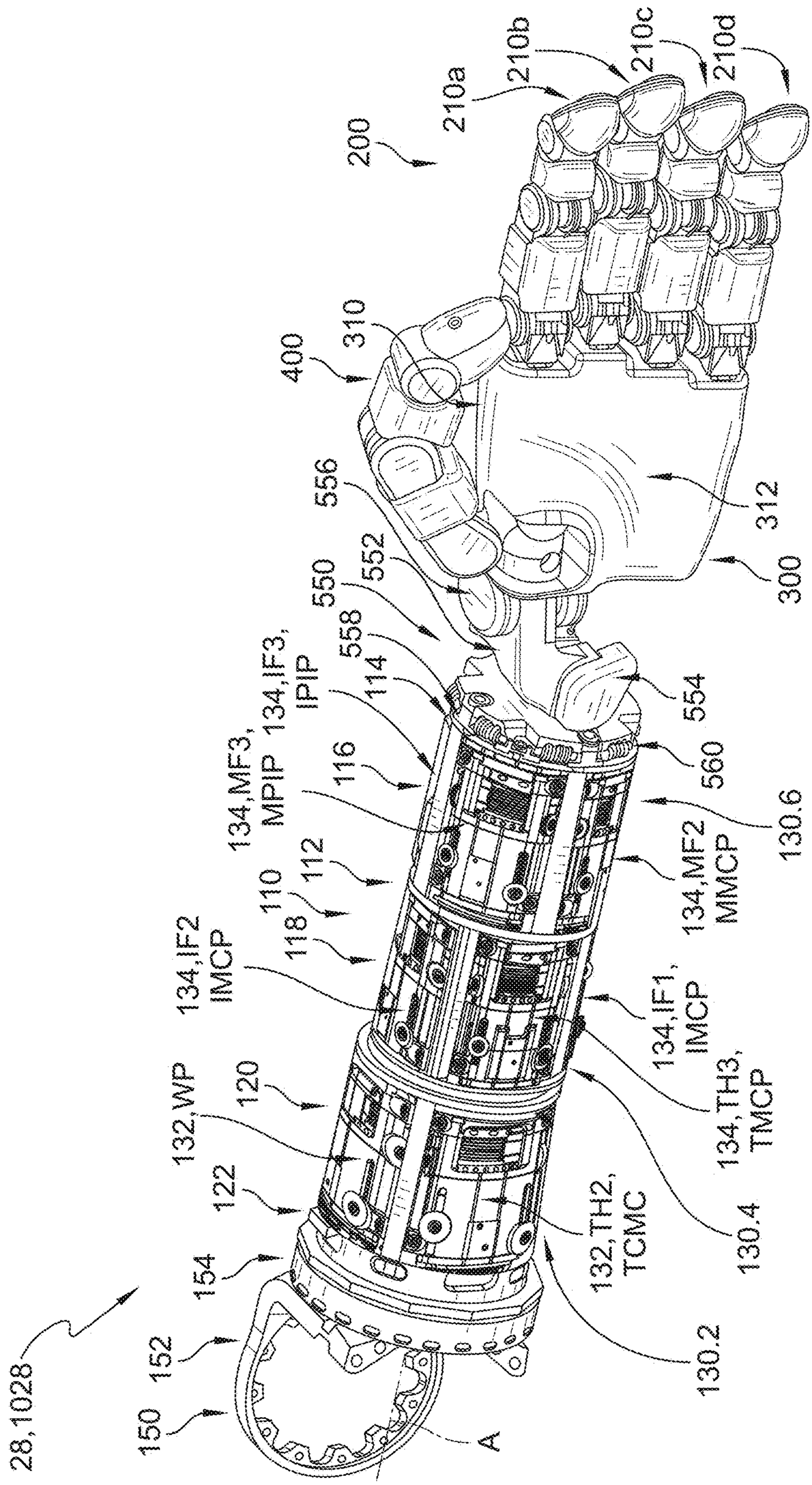
28,1028
150
152
154
122
132,WP
120
134,IF2
IMCP
118
110
112
134,MF3,
MPIP
116
134,IF3,
IPIP
114
558
550
552
556
400
310
200
210a
210b
210c
210d
312
300
554
560
130.6
134,MF2
MMCP
134,IF1,
IMCP
134,TH3,
TMCP
130.4
132,TH2,
TCMC
130.2
A

FIG. 3

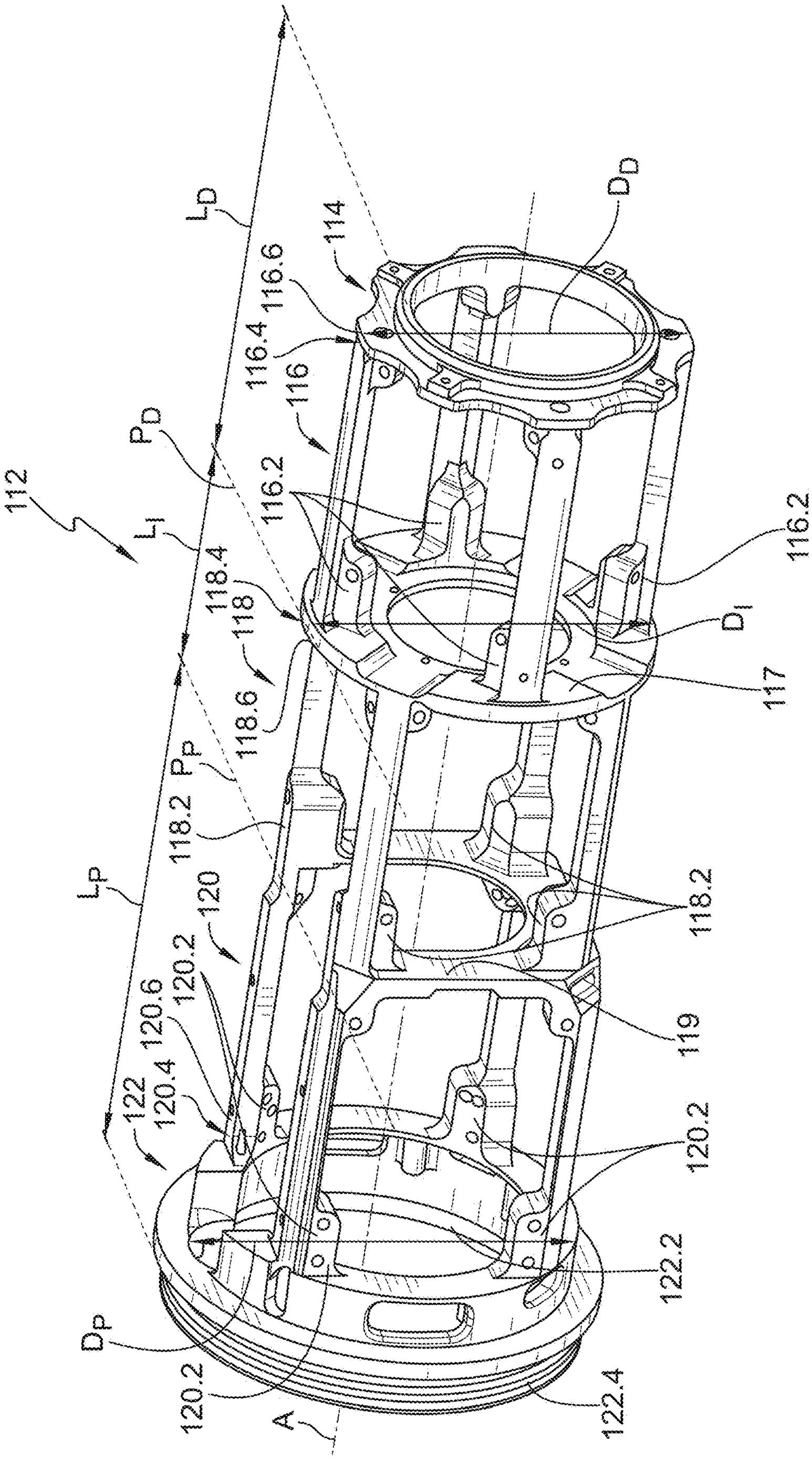
112
L_D
P_D
L_I
L_P
D_P
D_D
D_I
P_P
A
114
116
116.2
116.4
116.6
117
118
118.2
118.4
118.6
119
120
120.2
120.4
120.6
122
122.2
122.4

FIG. 4

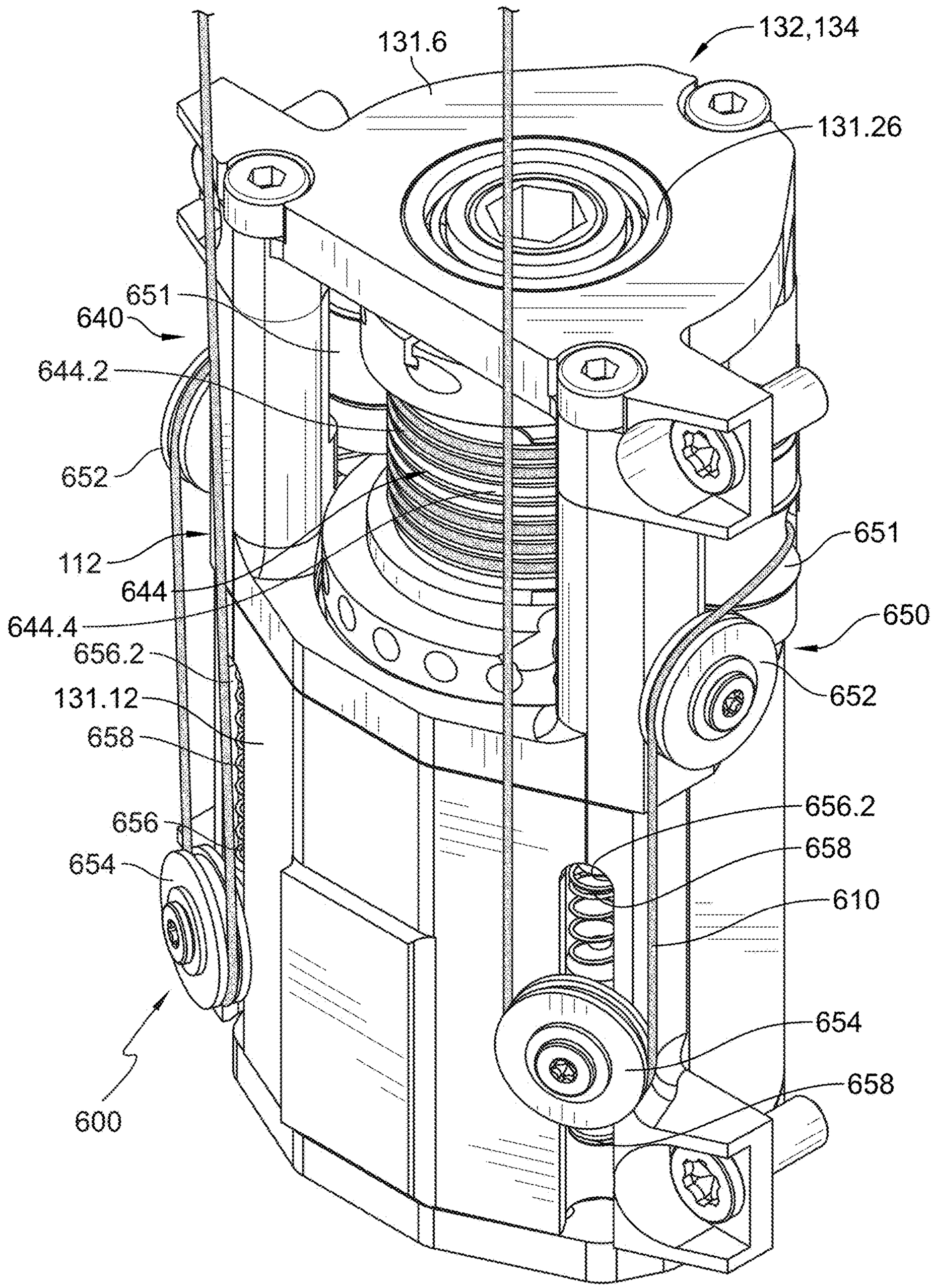
131.6
132,134
131.26
651
640
644.2
652
112
644
644.4
656.2
131.12
658
656
654
600
651
650
652
656.2
658
610
654
658

FIG. 5

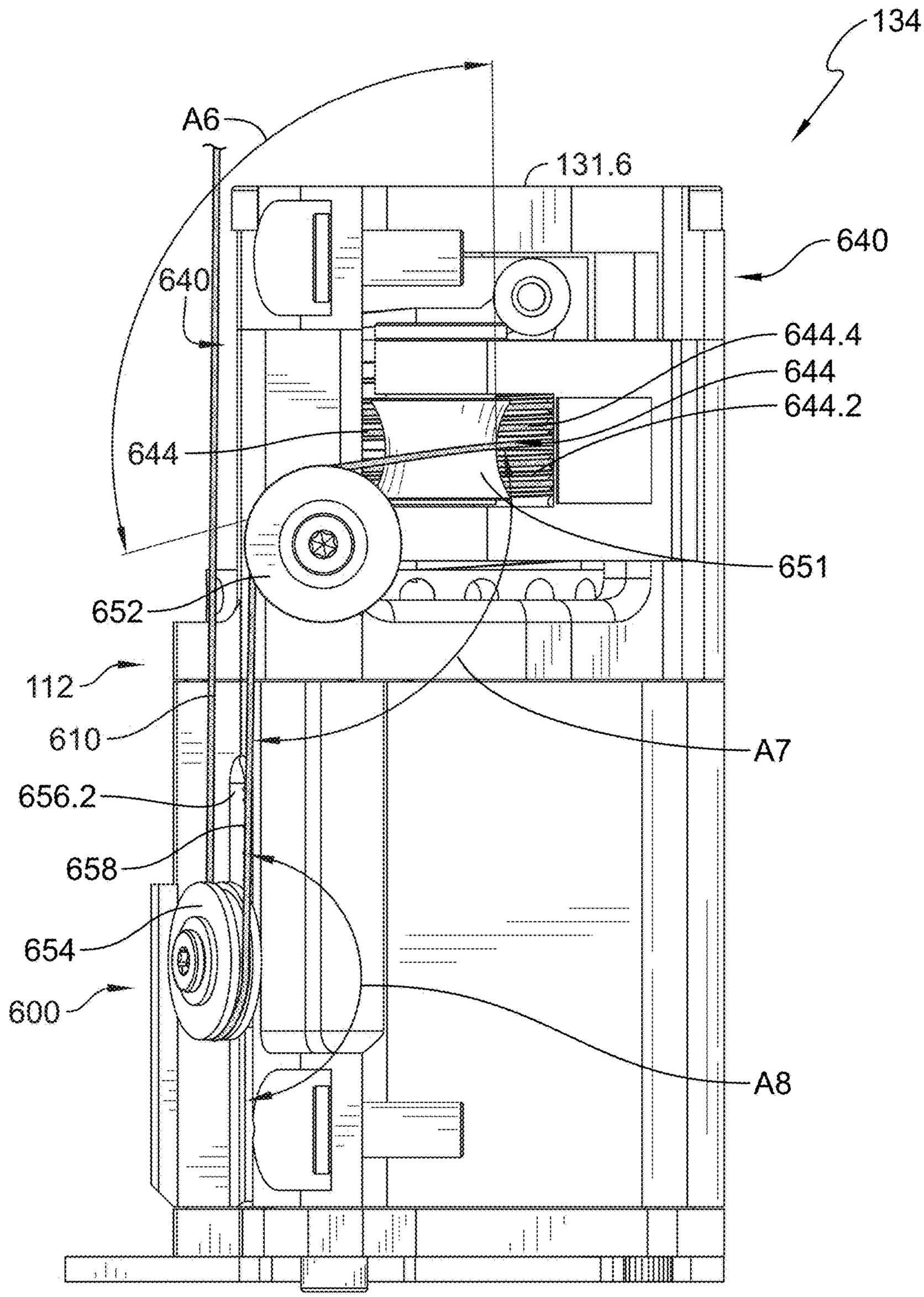
134
A6
131.6
640
640
644.4
644
644.2
644
651
652
112
610
A7
656.2
658
654
600
A8

FIG. 6

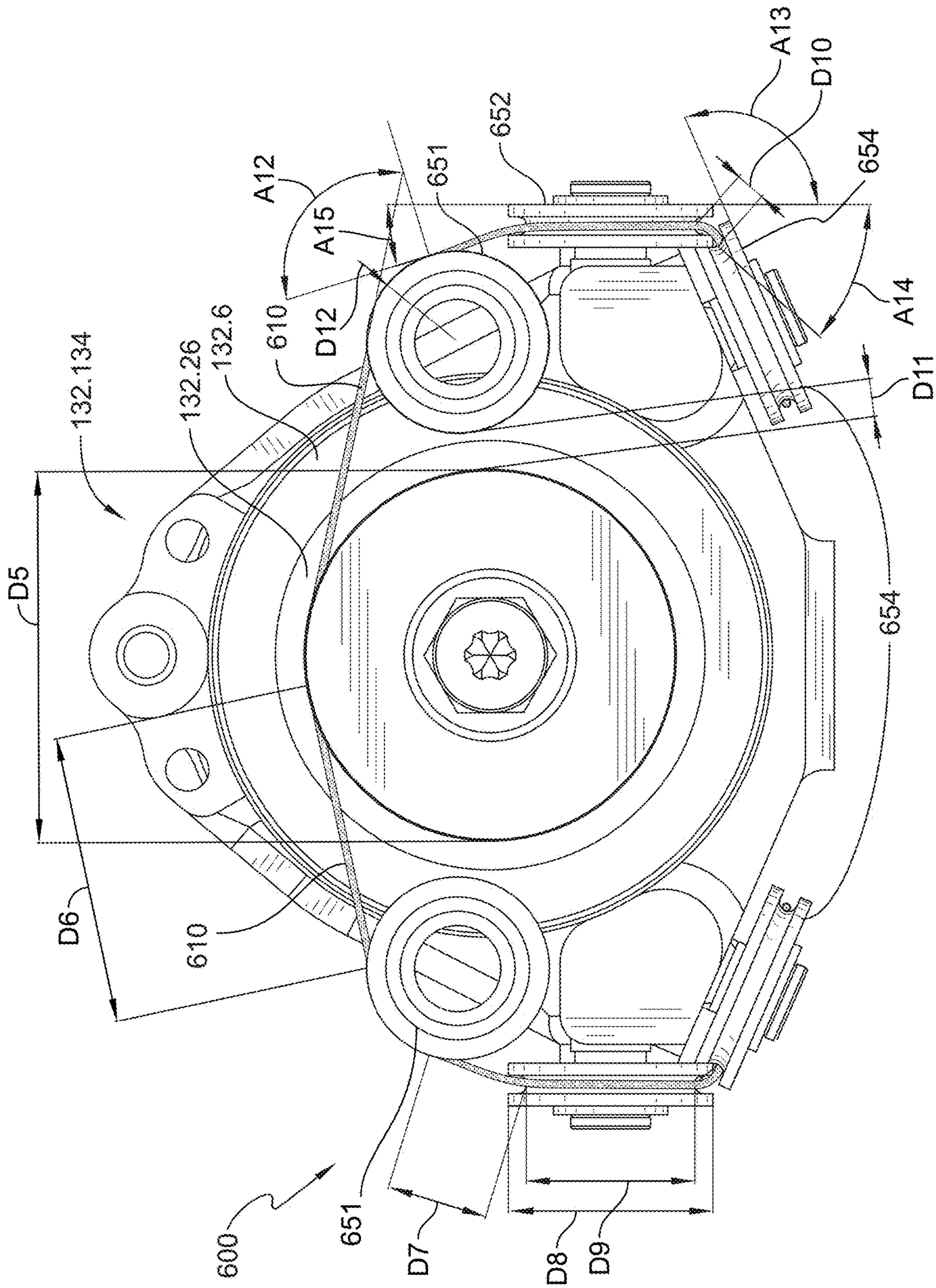
A13
D10
652
654
651
A12
A15
610
D12
A14
132.6
132.26
132.134
D11
D5
654
D6
610
600
651
D7
D8
D9

FIG. 7

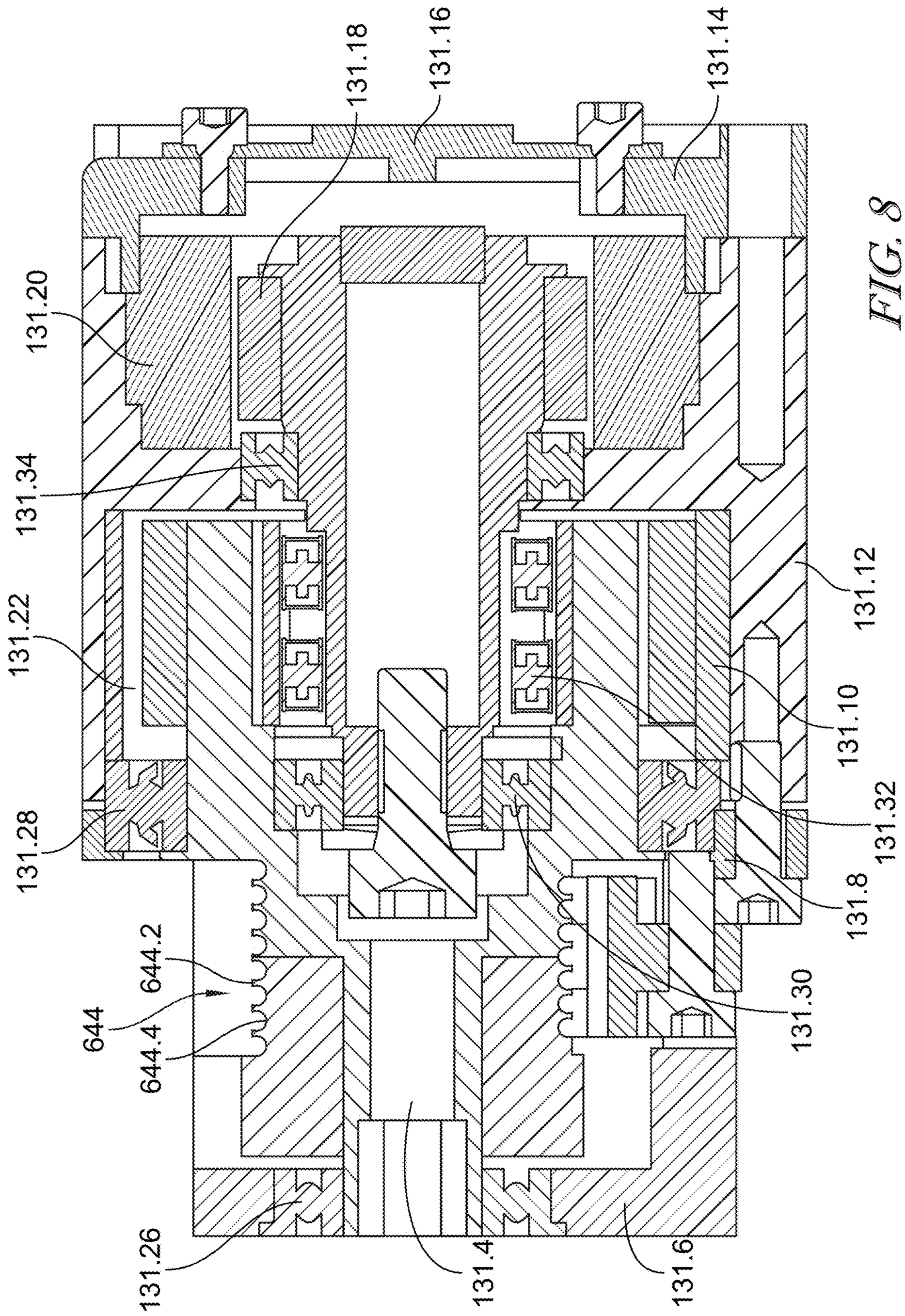
131.18
131.16
131.14
131.20
131.34
131.22
131.28
131.12
131.10
131.32
131.8
131.30
644.2
644
644.4
131.26
131.4
131.6

FIG. 8

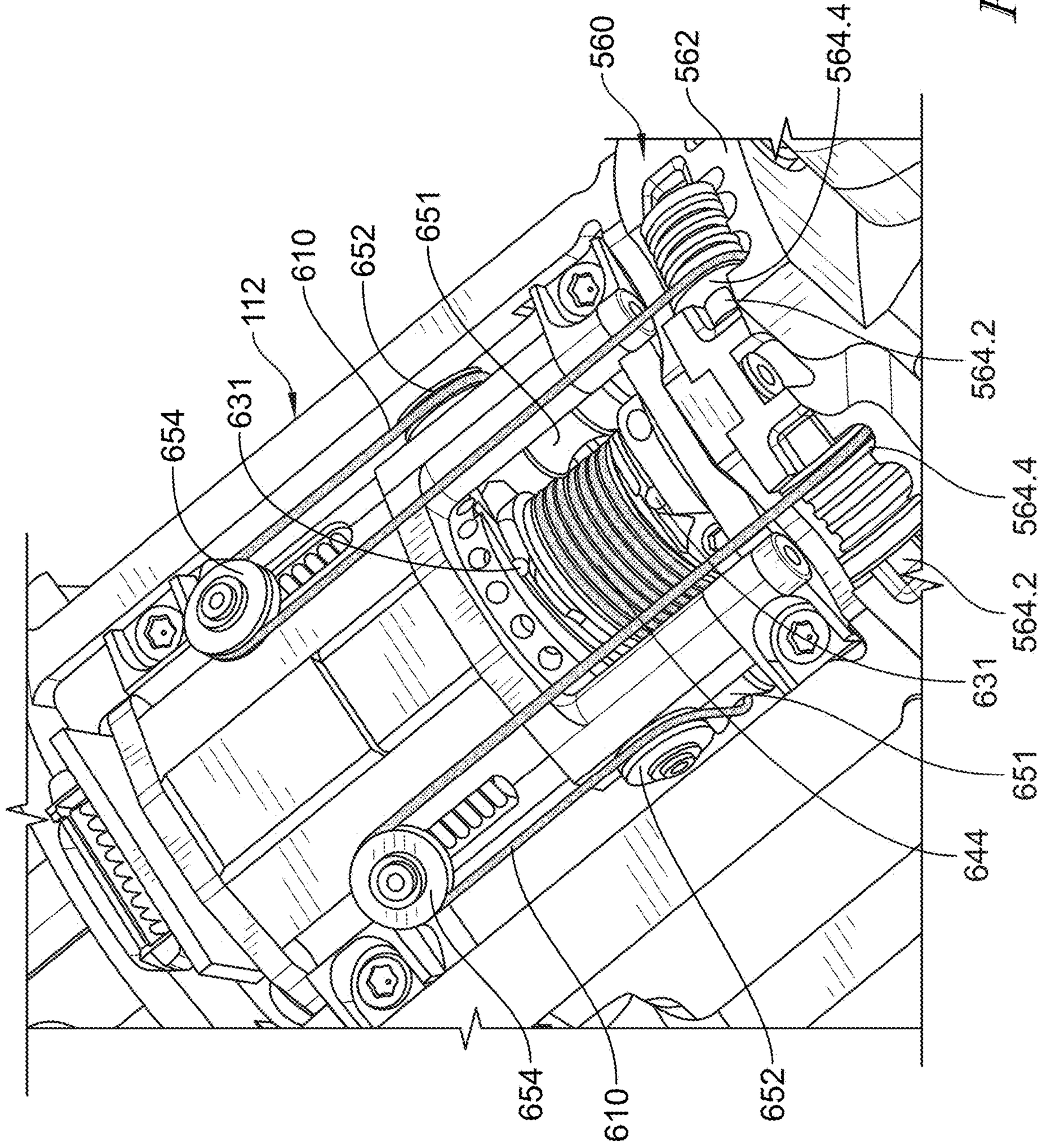
560
562
564.4
564.2
564.4
564.2
631
651
644
654
610
652
651
652
610
112
631
654

FIG. 9

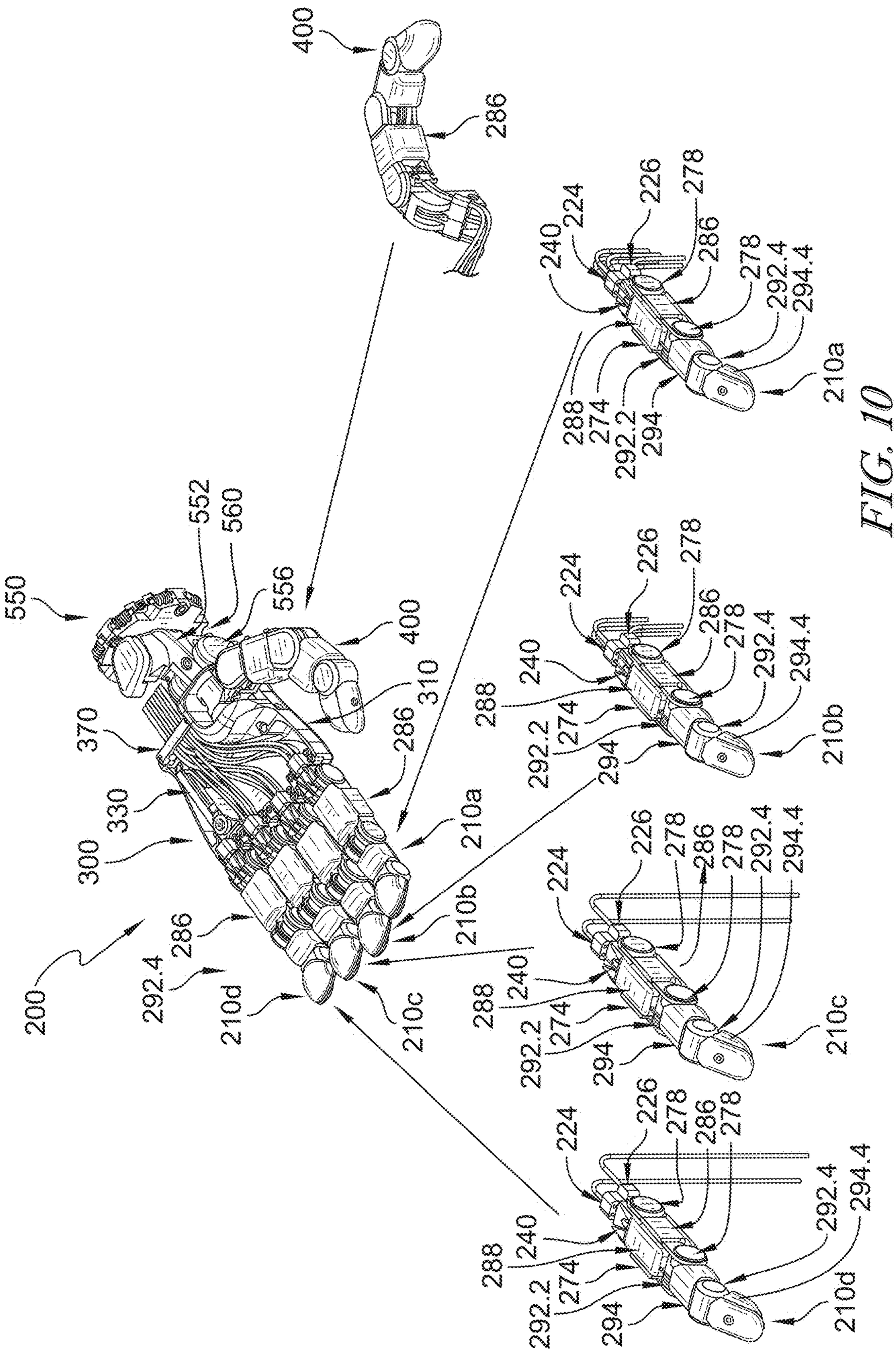
400
286
550
552
560
556
400
310
370
286
330
300
210a
210b
210c
210d
200
292.4
286
288
240
224
226
278
286
278
292.4
294.4
210a
288
274
292.2
294
210b
210c
210d

FIG. 10

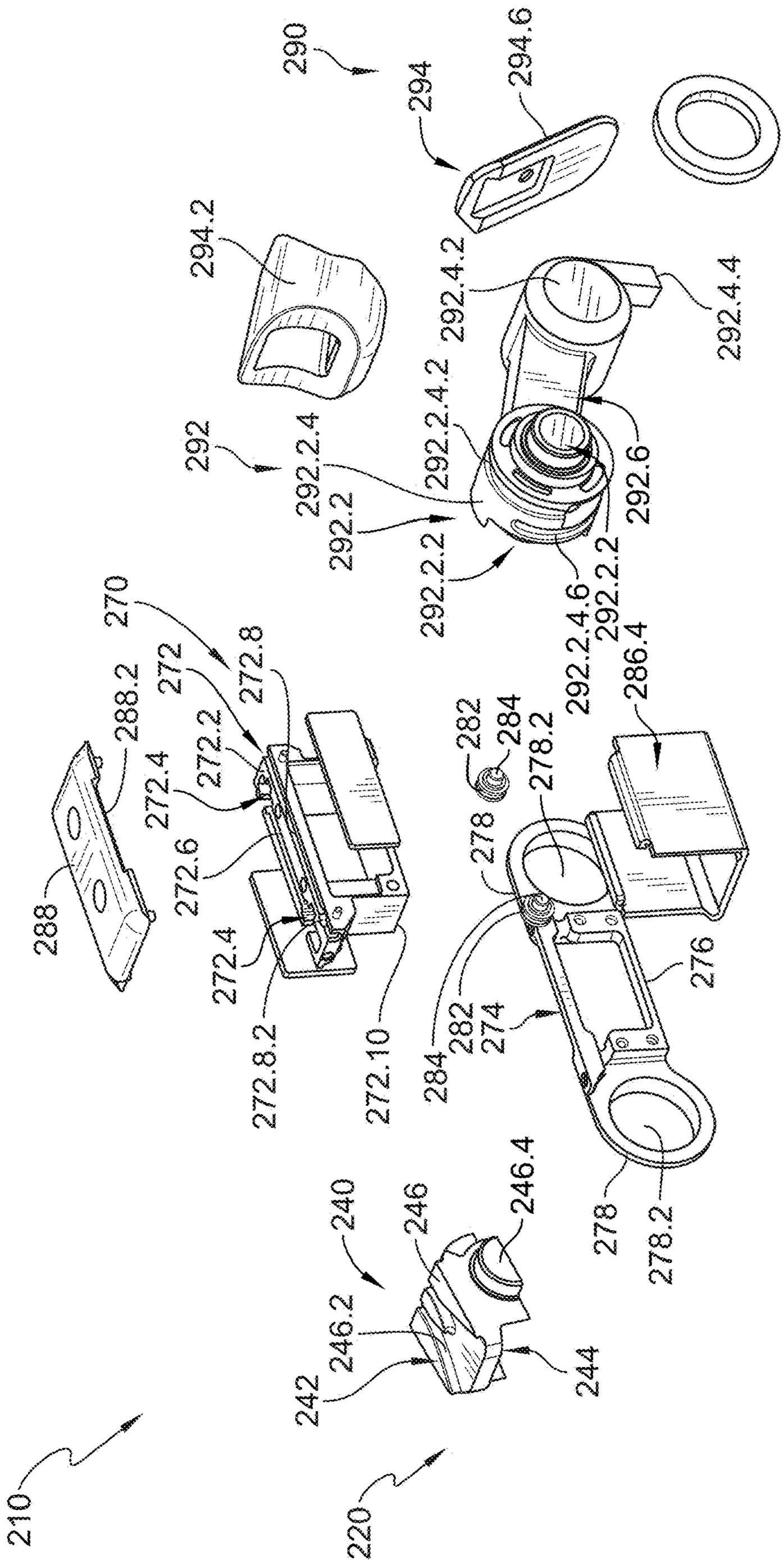
290
294
294.6
294.2
292
292.2.4
292.2
292.2.2
292.2.4.2
292.4.2
292.4.4
292.6
292.2.2
292.2.4.6
292.2.2
286.4
270
272
272.8
272.2
272.4
272.6
288.2
288
272.4
272.8.2
272.10
282
284
278.2
278
282
274
276
278
278.2
240
246
246.4
246.2
242
244
210
220

FIG. 11A

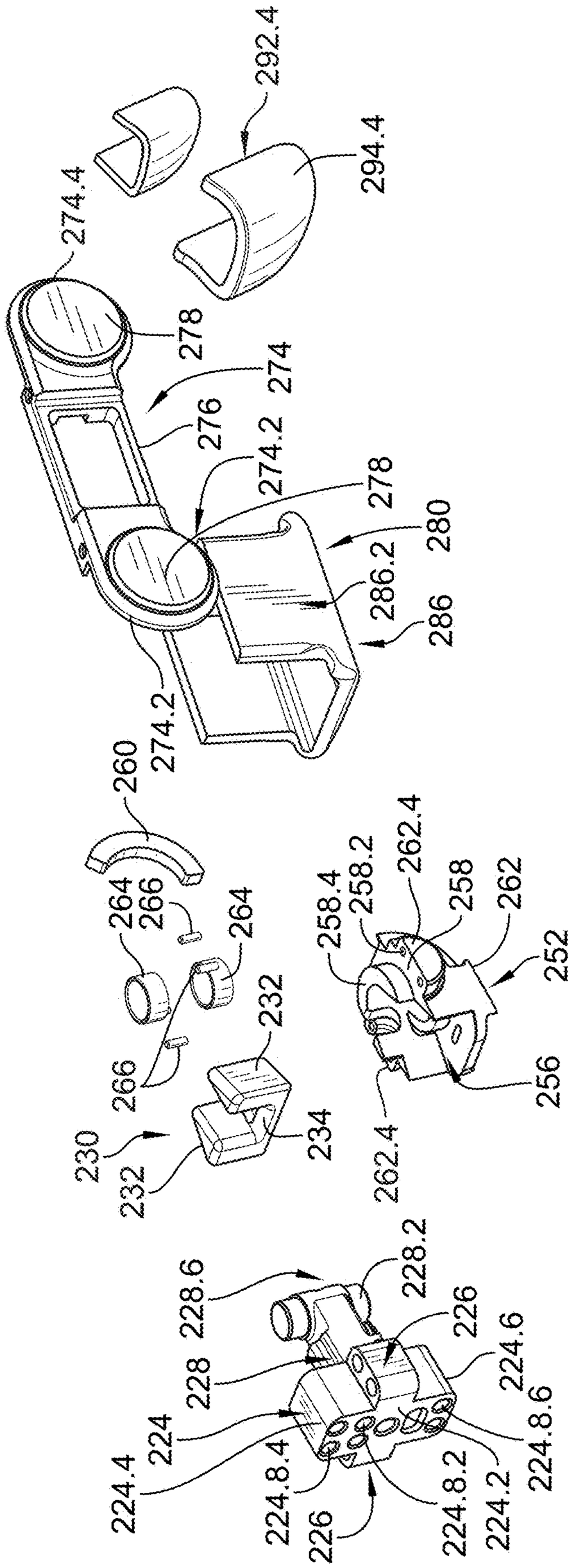
292.4
294.4
274.4
278
274
276
274.2
278
280
286.2
286
274.2
260
264
266
264
266
232
230
232
234
262.4
258.4
258.2
262.4
258
262
252
256
228.6
228.2
228
226
224.6
224
224.4
224.8.4
224.8.2
224.8.6
226
224.2

FIG. 11B

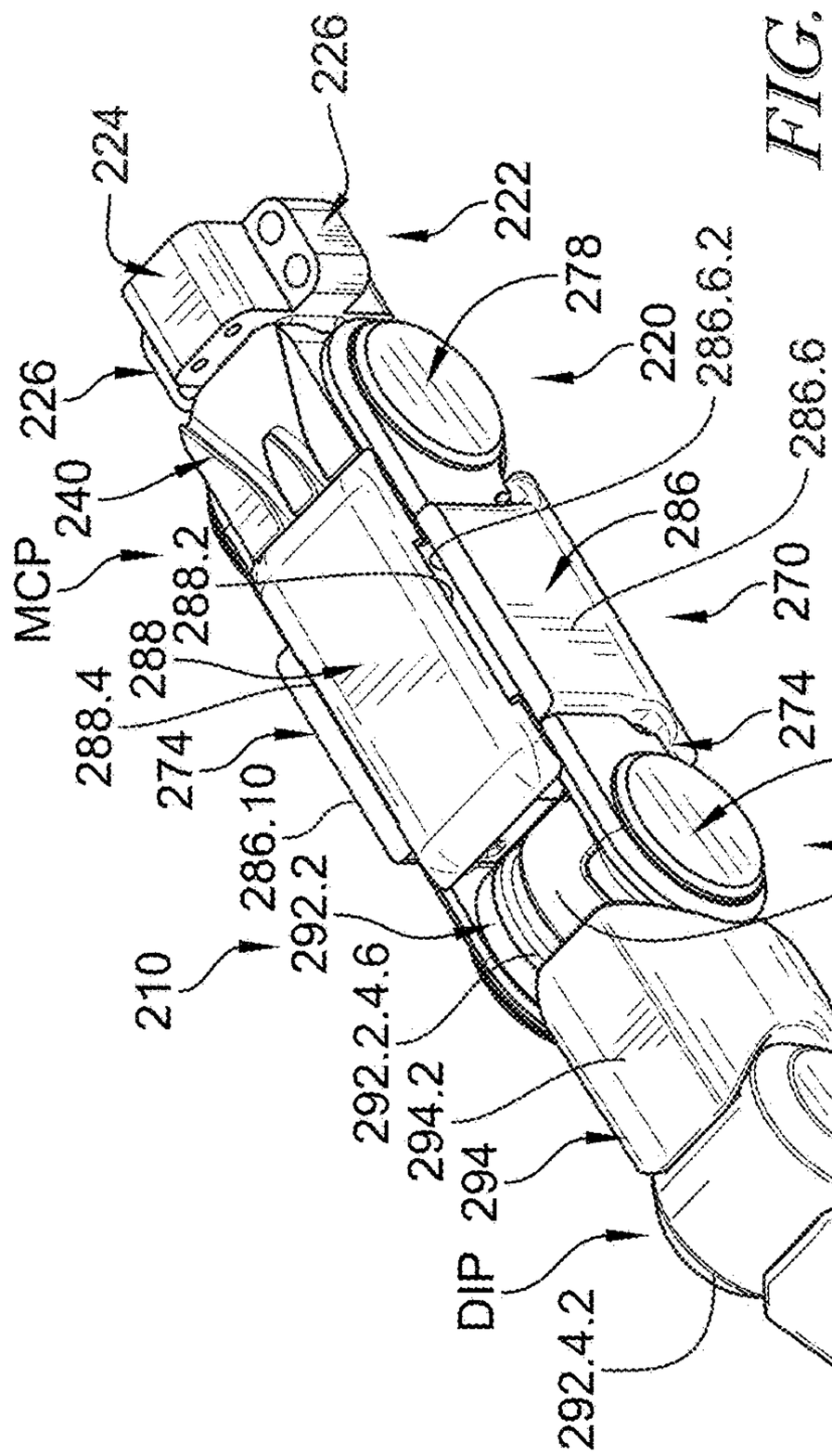
224
226
222
278
220
286.6.2
286.6
286
270
226
240
MCP
288.2
288
288.4
274
286.10
292.2
210
292.2.4.6
292.2.4
294.2
294
DIP
292.4.2
274
278
PIP
292.2.4
290
292.4
294.4
294.6

FIG. 12

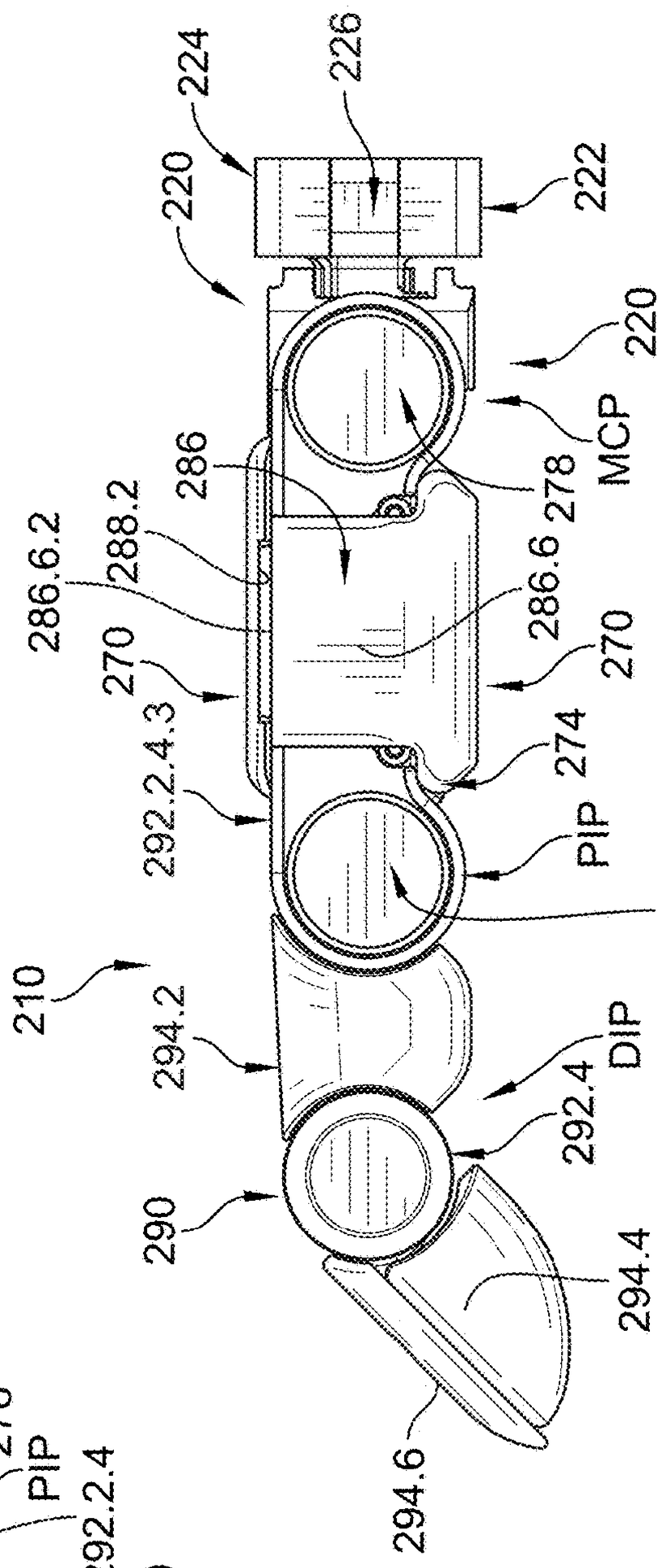
224
226
220
222
220
MCP
286
278
286.6.2
288.2
286.6
270
270
292.2.4.3
274
PIP
278
210
294.2
DIP
292.4
290
294.4
294.6

FIG. 13

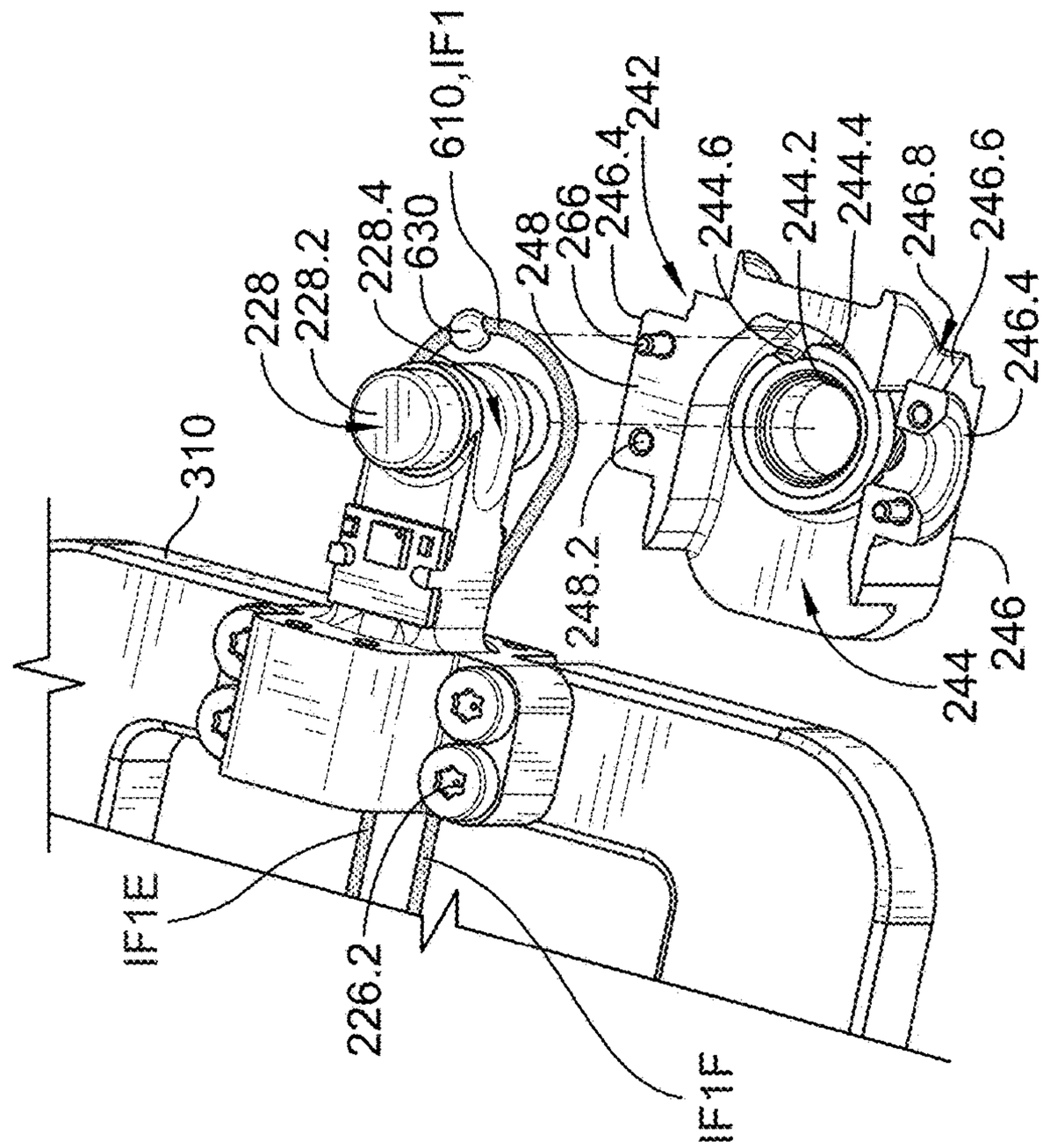
310
228
228.2
228.4
630
610,IF1
248
266
246.4
242
244.6
244.2
244.4
246.8
246.6
246.4
248.2
244
246.6
IF1E
226.2
IF1F

FIG. 15

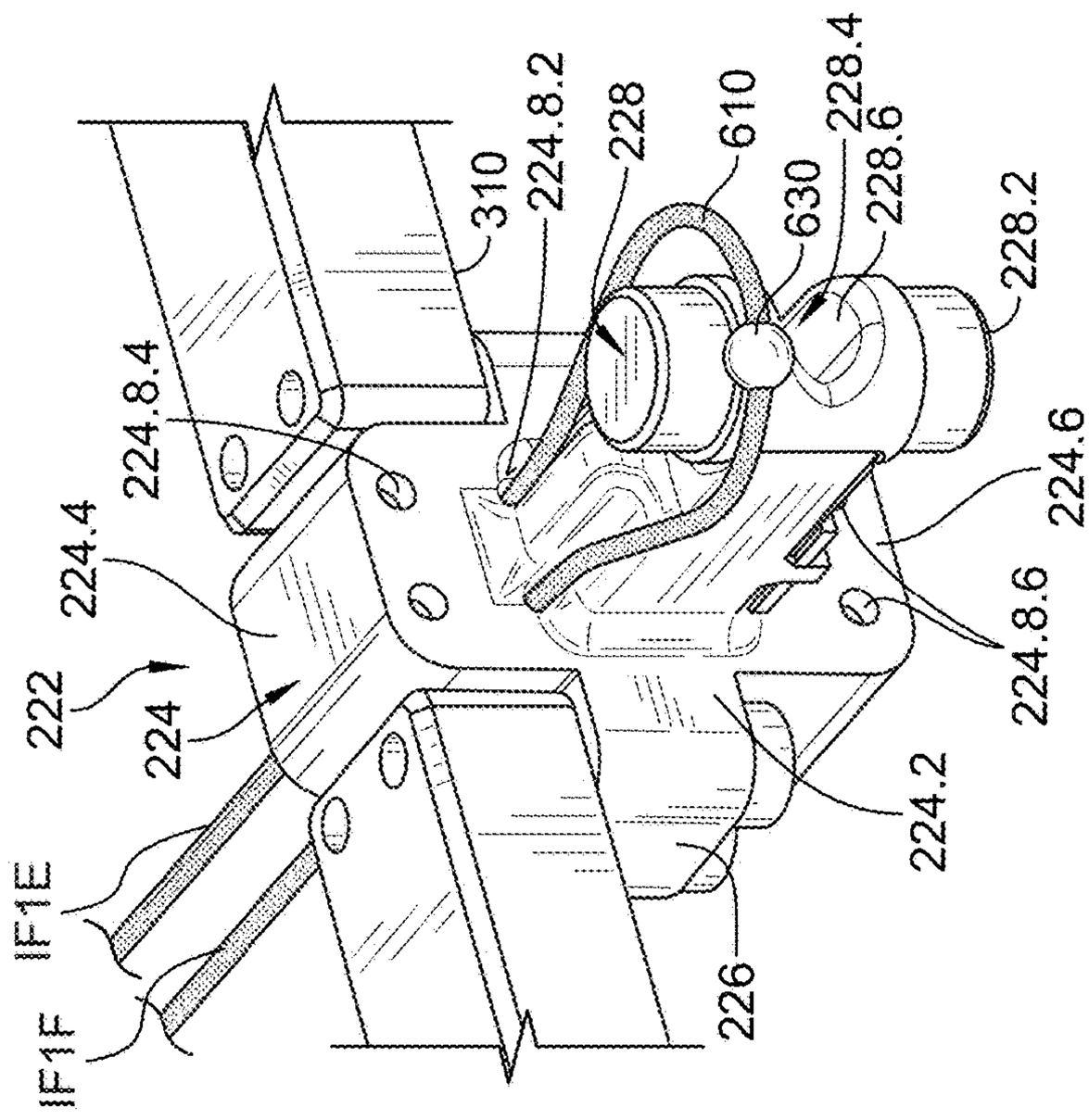
310
224.8.2
228
610
228.4
630
228.6
228.2
224.8.4
224.4
222
224
IF1E
IF1F
224.6
224.8.6
224.2
226

FIG. 14

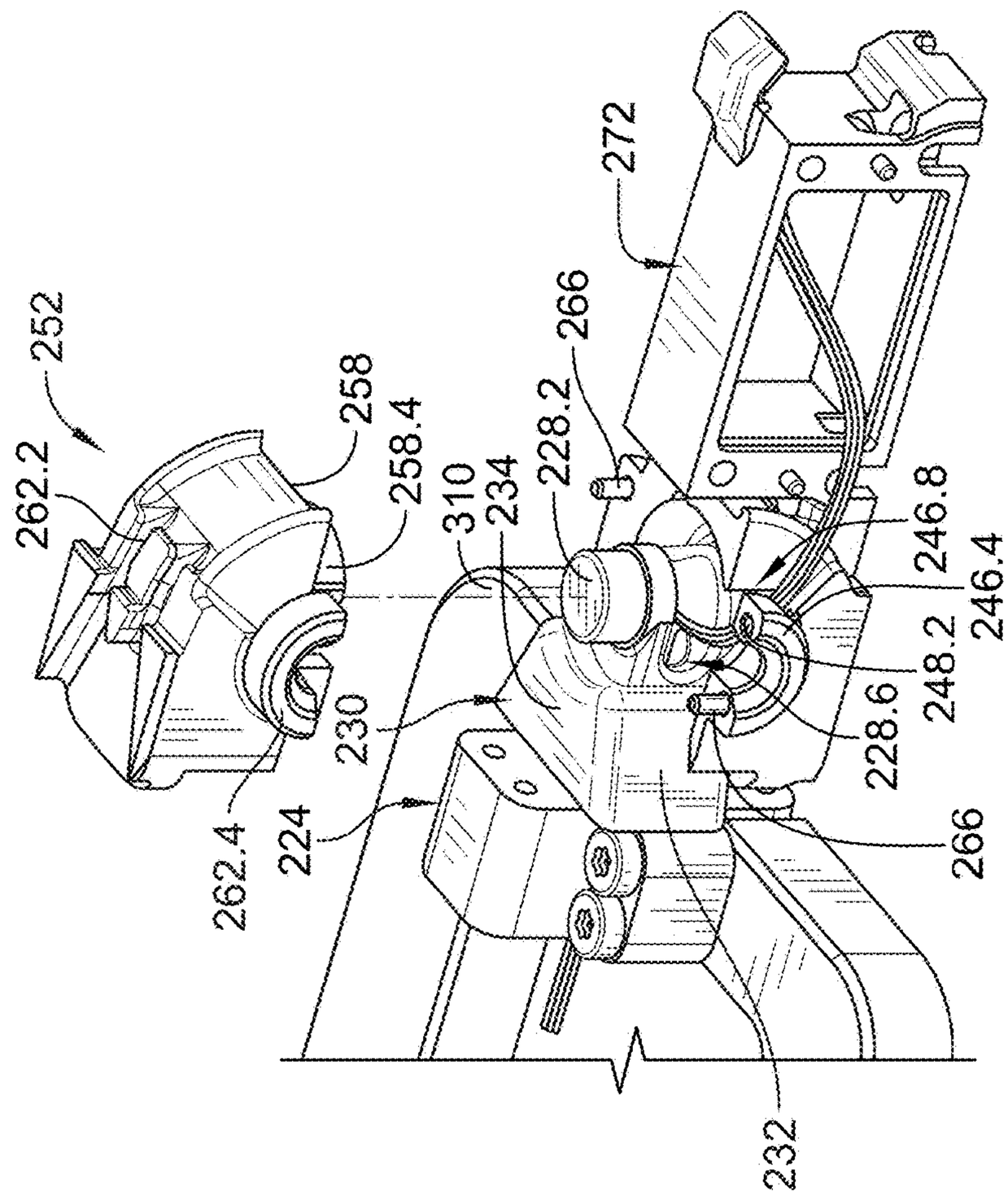
272
266
252
258
258.4
228.2
262.2
310
234
246.8
246.4
248.2
230
228.6
224
262.4
266
232

FIG. 17

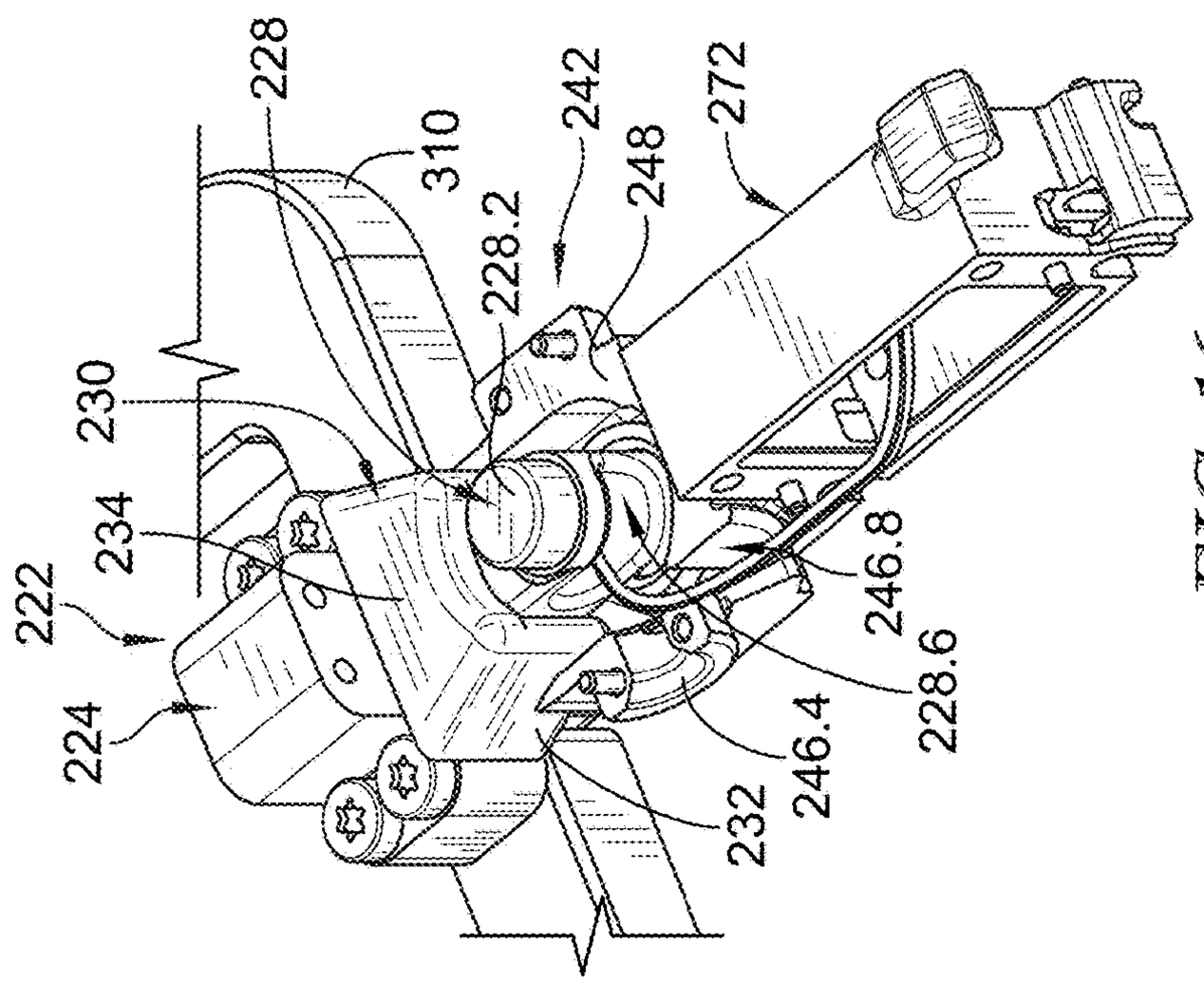
228
310
242
248
272
228.2
230
234
222
224
246.8
228.6
246.4
232

FIG. 16

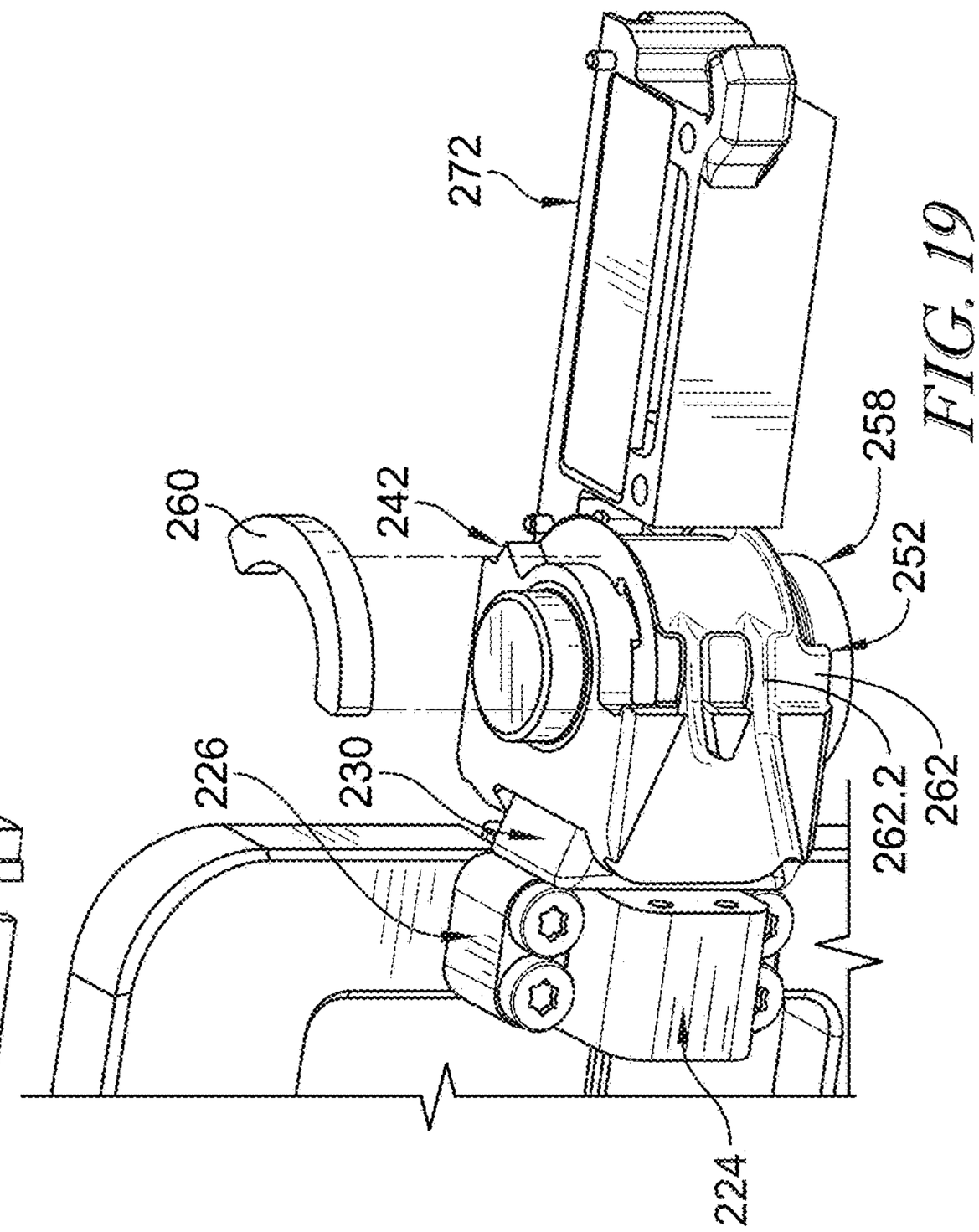
272
260
242
258
252
262.2
262
226
230
224

FIG. 19

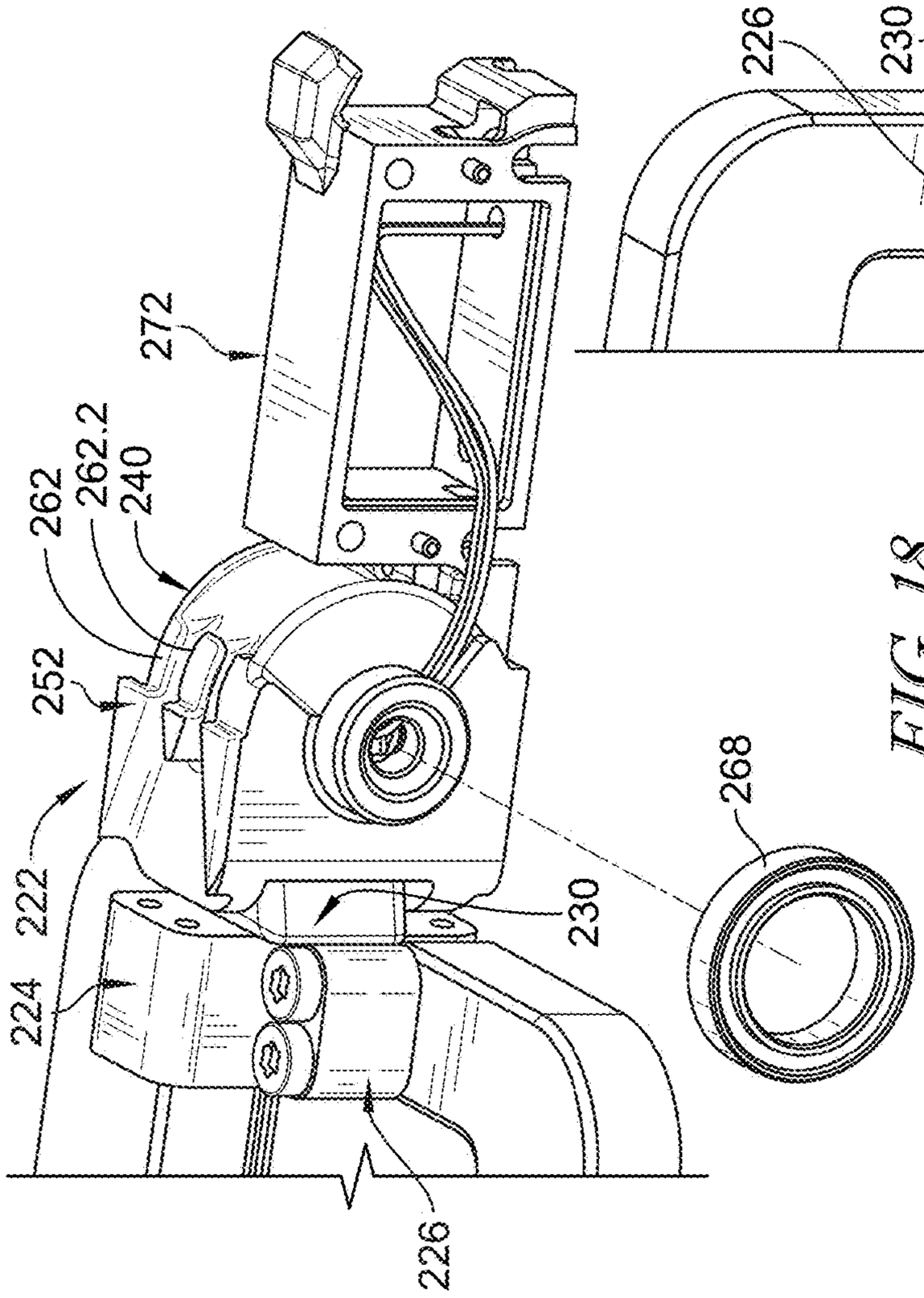
272
262
262.2
240
252
222
224
226
230
268

FIG. 18

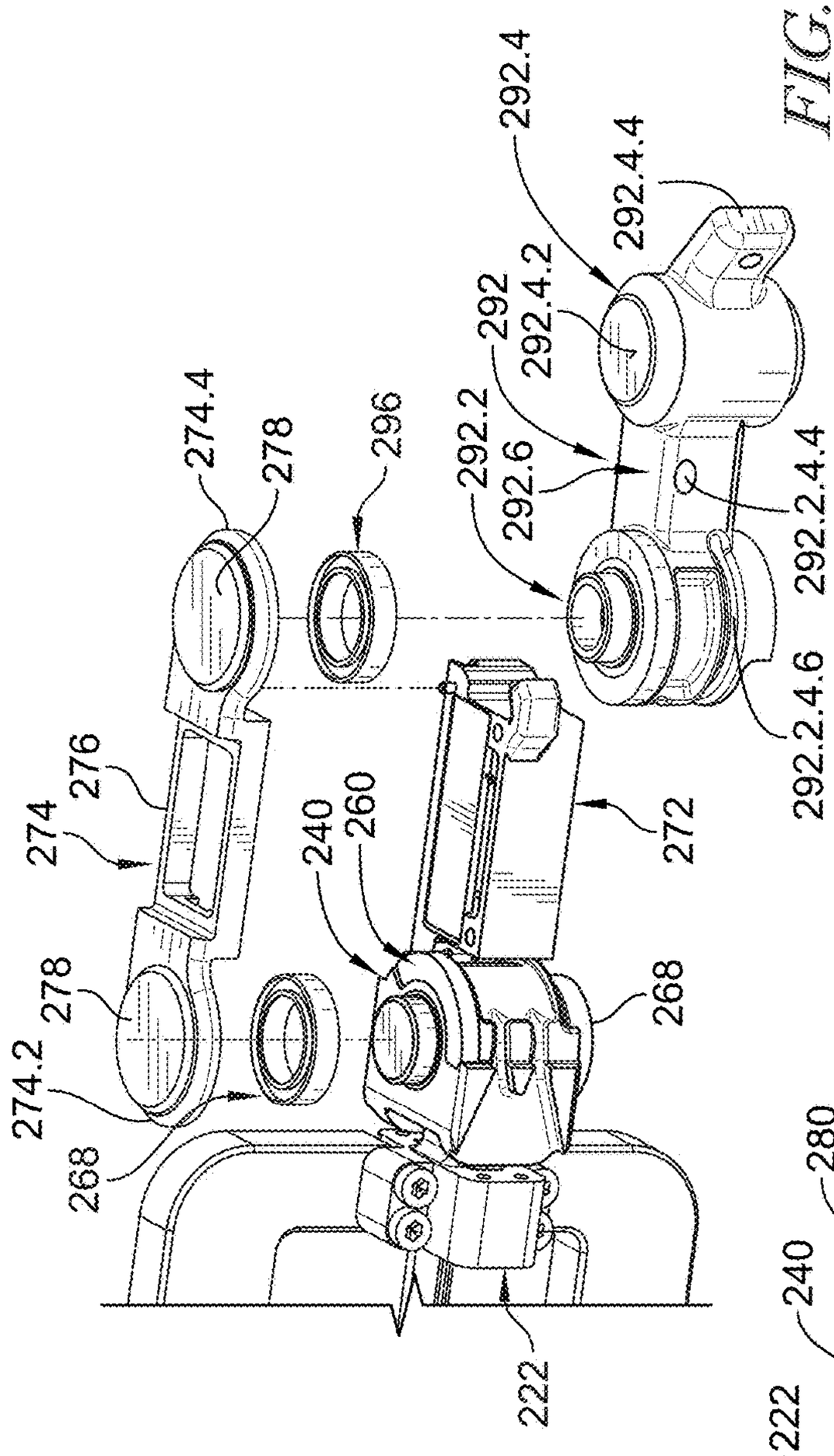
274.4
278
296
292.2
292
292.4.2
292.4
292.4.4
292.6
292.2.4.4
292.2.4.6
276
274
240
260
272
278
268
274.2
268
222

FIG. 20

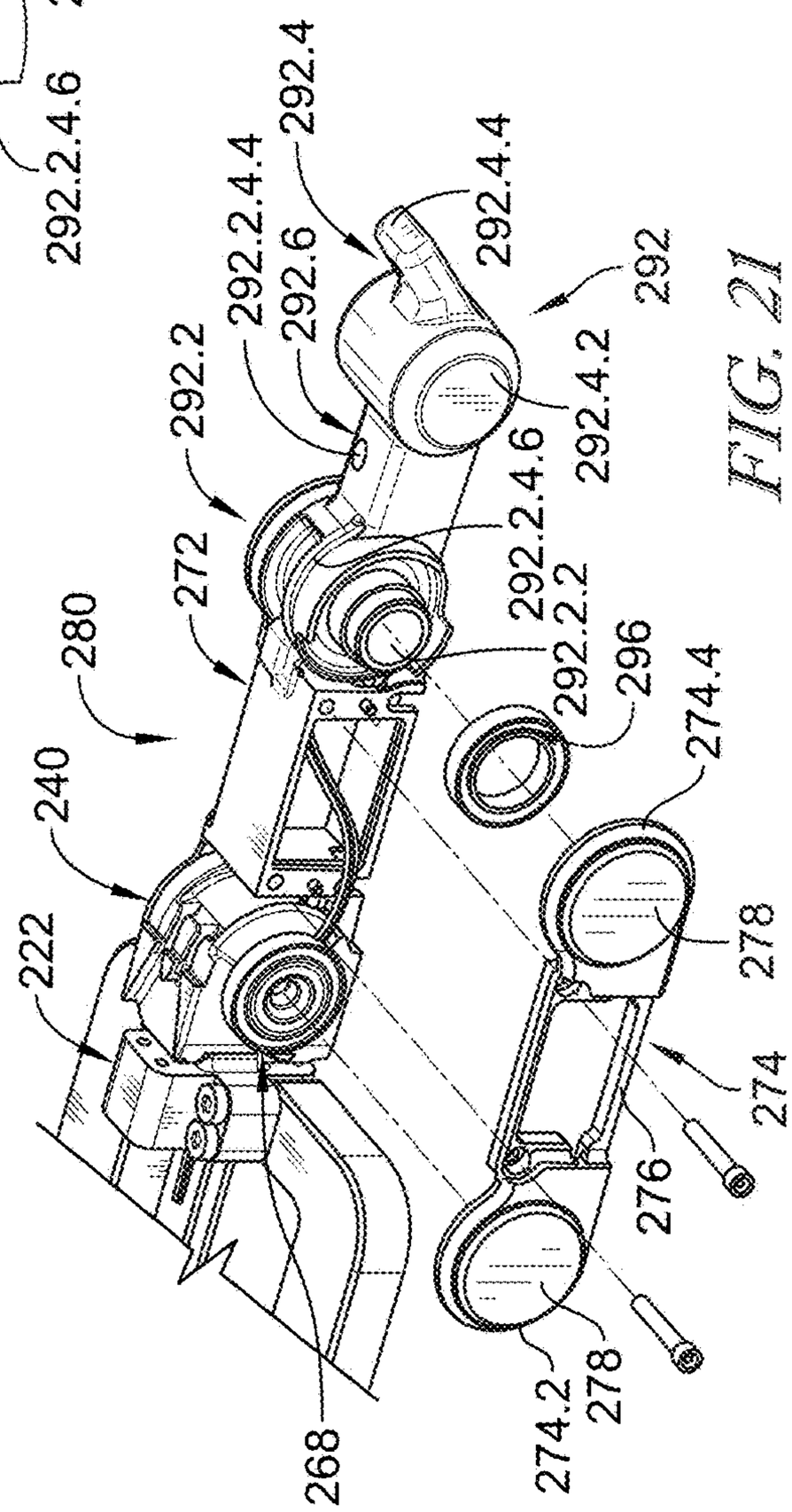
292.4
292.2.4.4
292.4.4
292.6
292
292.2
292.4.2
292.2.4.6
272
292.2.2
280
296
274.4
240
278
222
274
276
268
274.2
278

FIG. 21

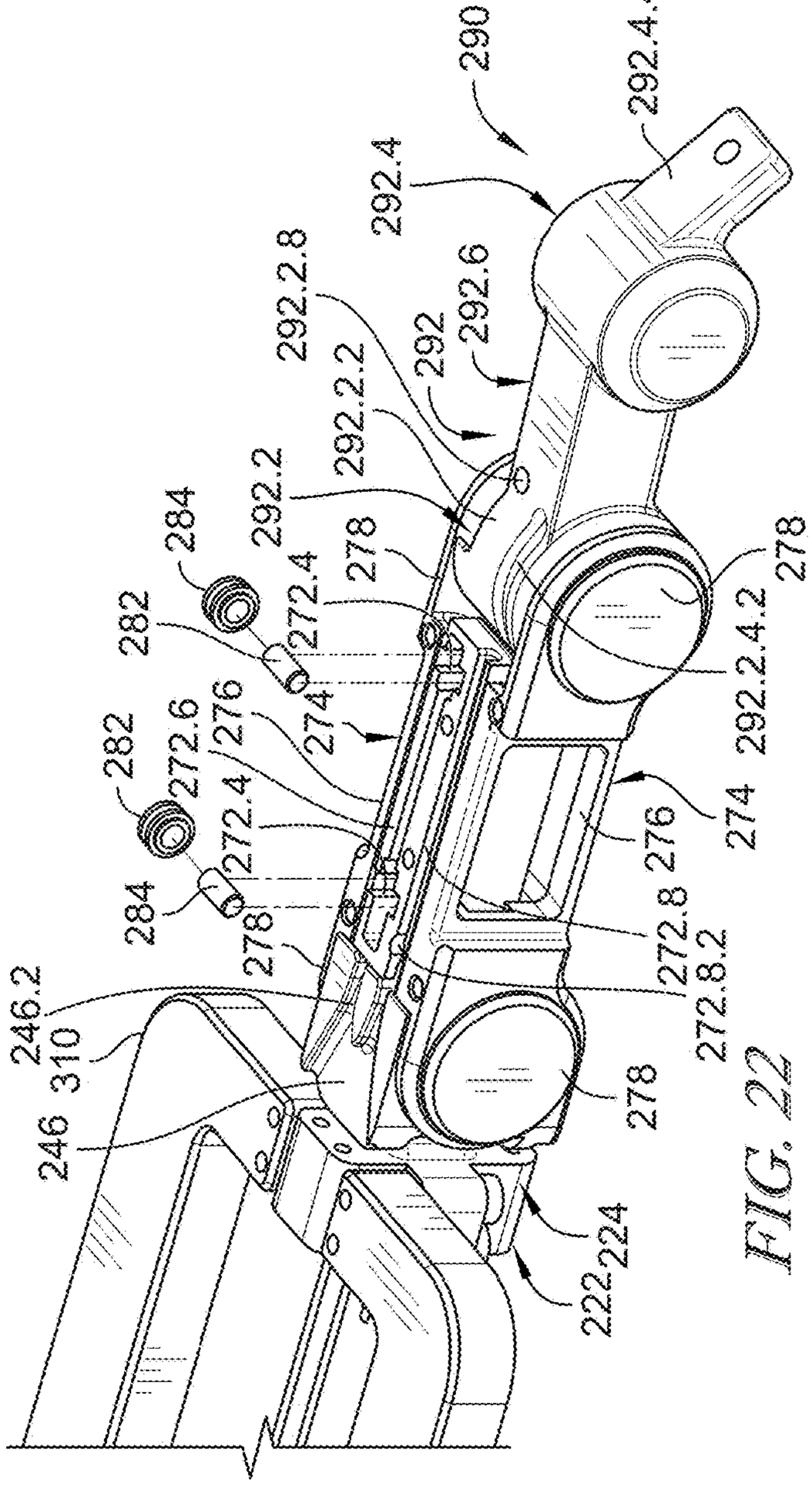
290
292.4.4
292.4
292.2.8
292.6
292
292.2.2
292.2
284
282
278
272.4
292.2.4.2
278
282
272.6
276
274
272.4
284
278
276
274
272.8
272.8.2
246.2
310
246
278
224
222

FIG. 22

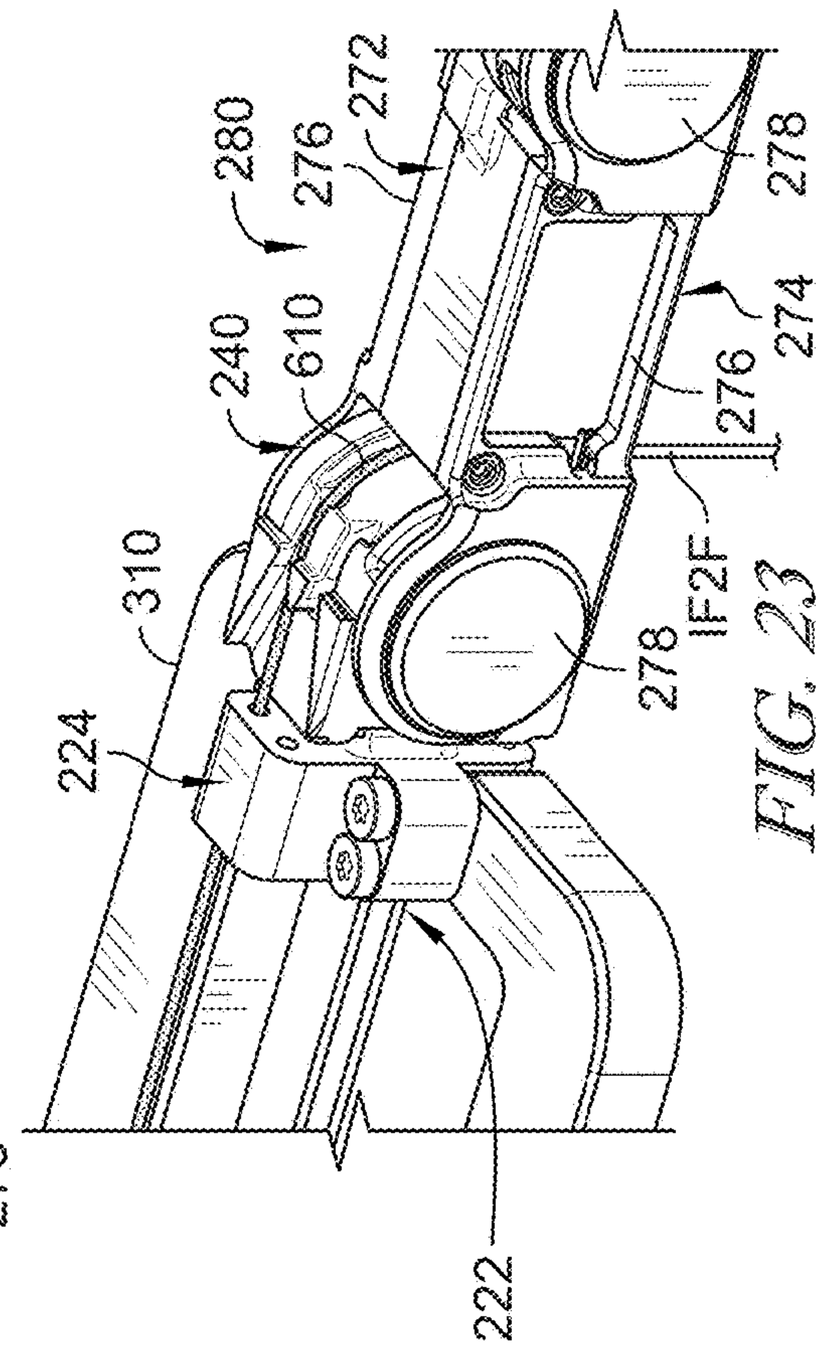
280
276
272
278
240
610
274
276
IF2F
310
278
224
222

FIG. 23

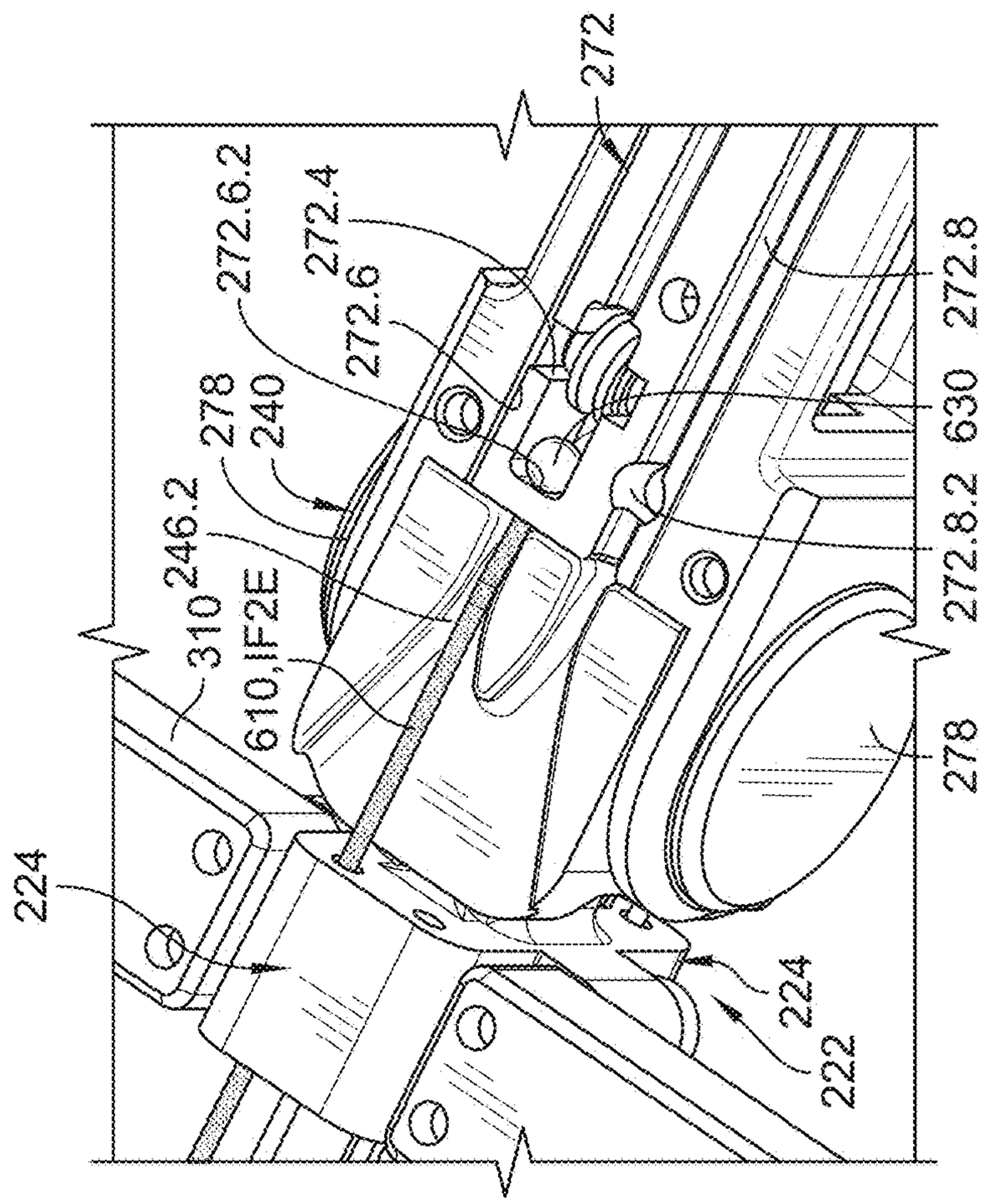
272
272.6.2
272.4
272.6
278
240
246.2
310
610,IF2E
224
224
222
272.8
630
272.8.2
278

FIG. 25

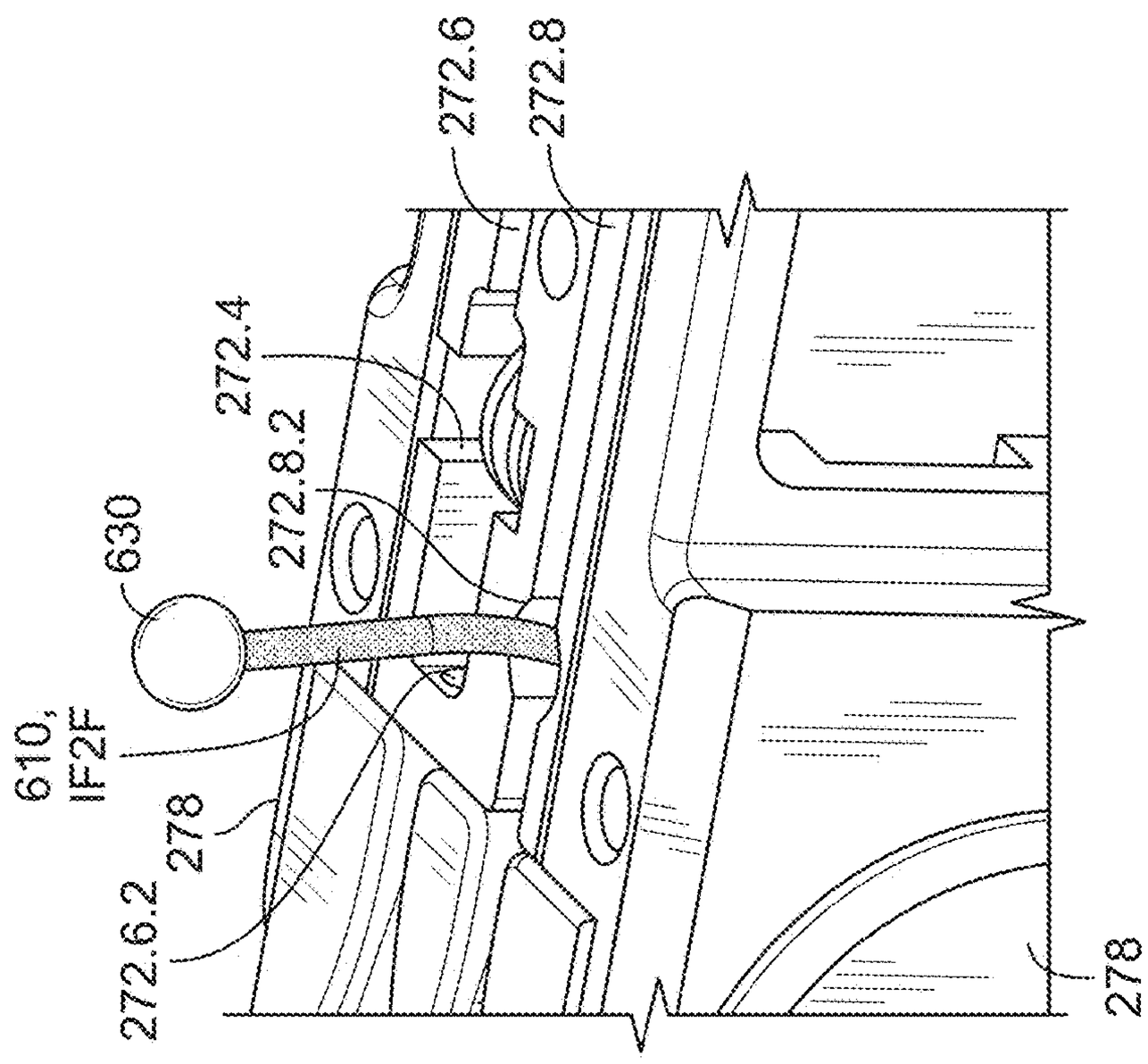
272.6
272.8
272.4
272.8.2
630
610,
IF2F
278
272.6.2
278

FIG. 24

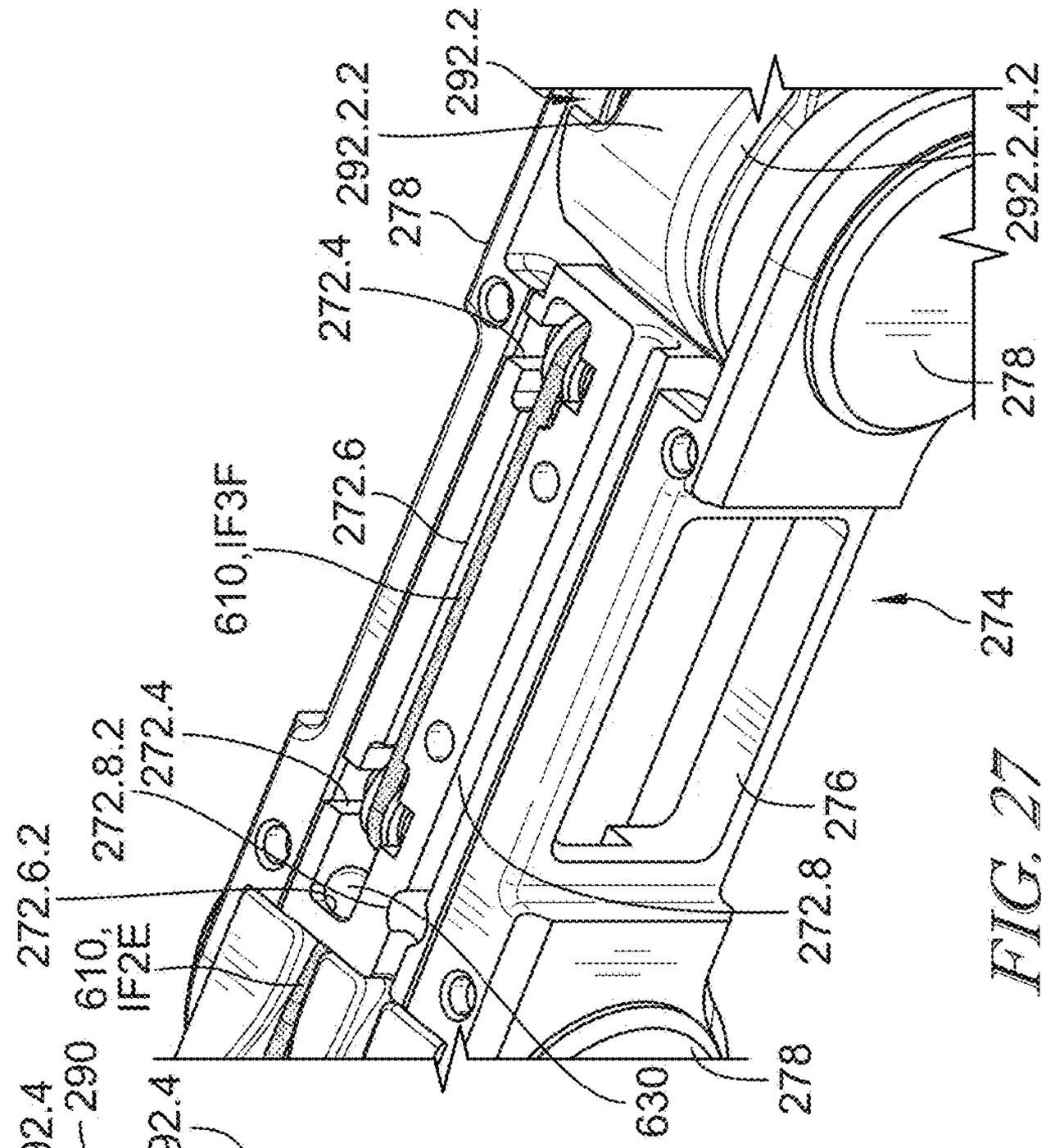
292.2
292.2.2
278
272.4
272.6
610,IF3F
272.4
272.8.2
272.6.2
610,
IF2E
290
292.4
630
278
272.8
276
274
278
292.2.4.2

FIG. 27

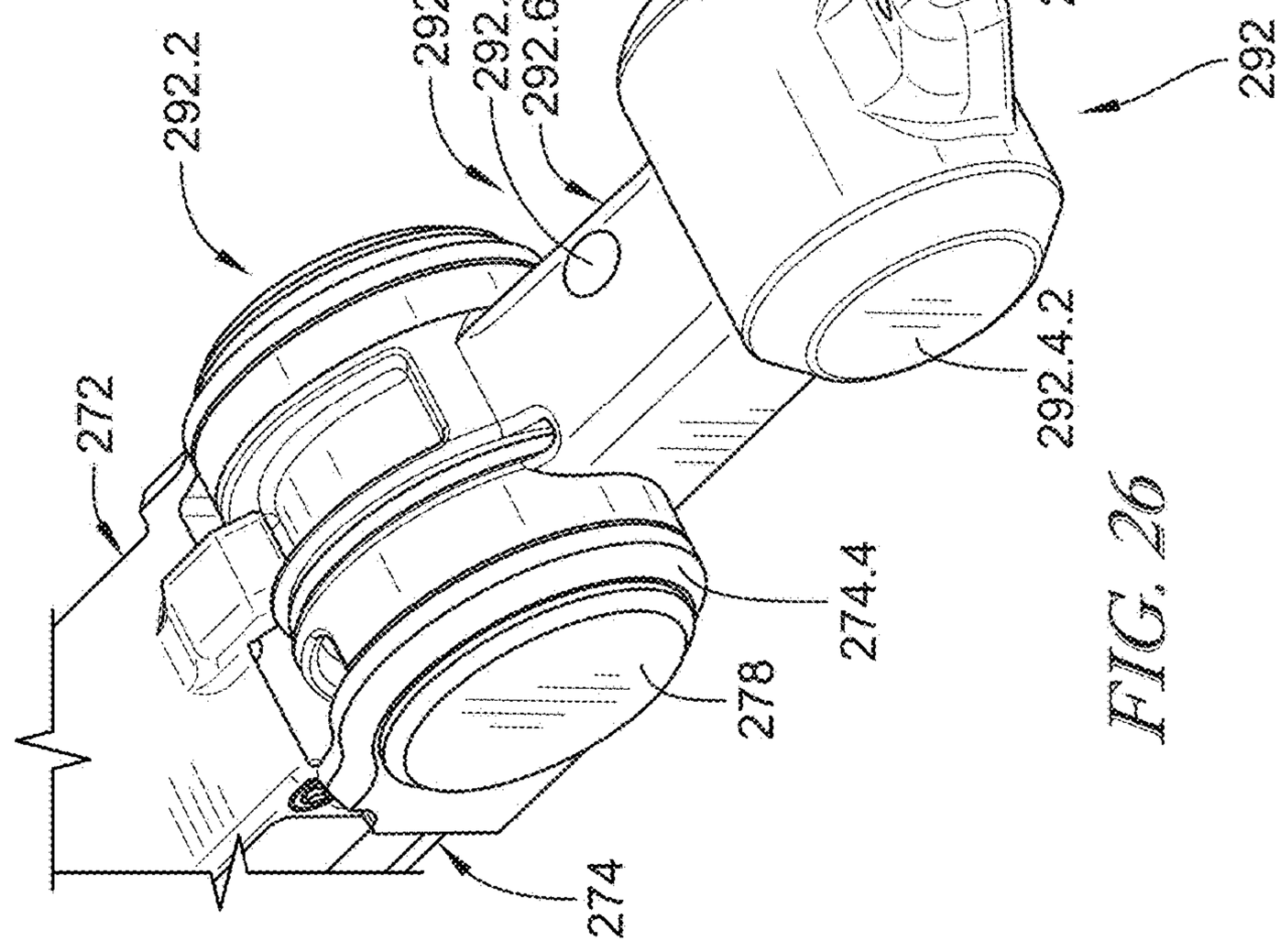
272
292.2
292
292.2.4.4
292.6
292.4
292.4.4
292
292.4.2
274.4
278
274

FIG. 26

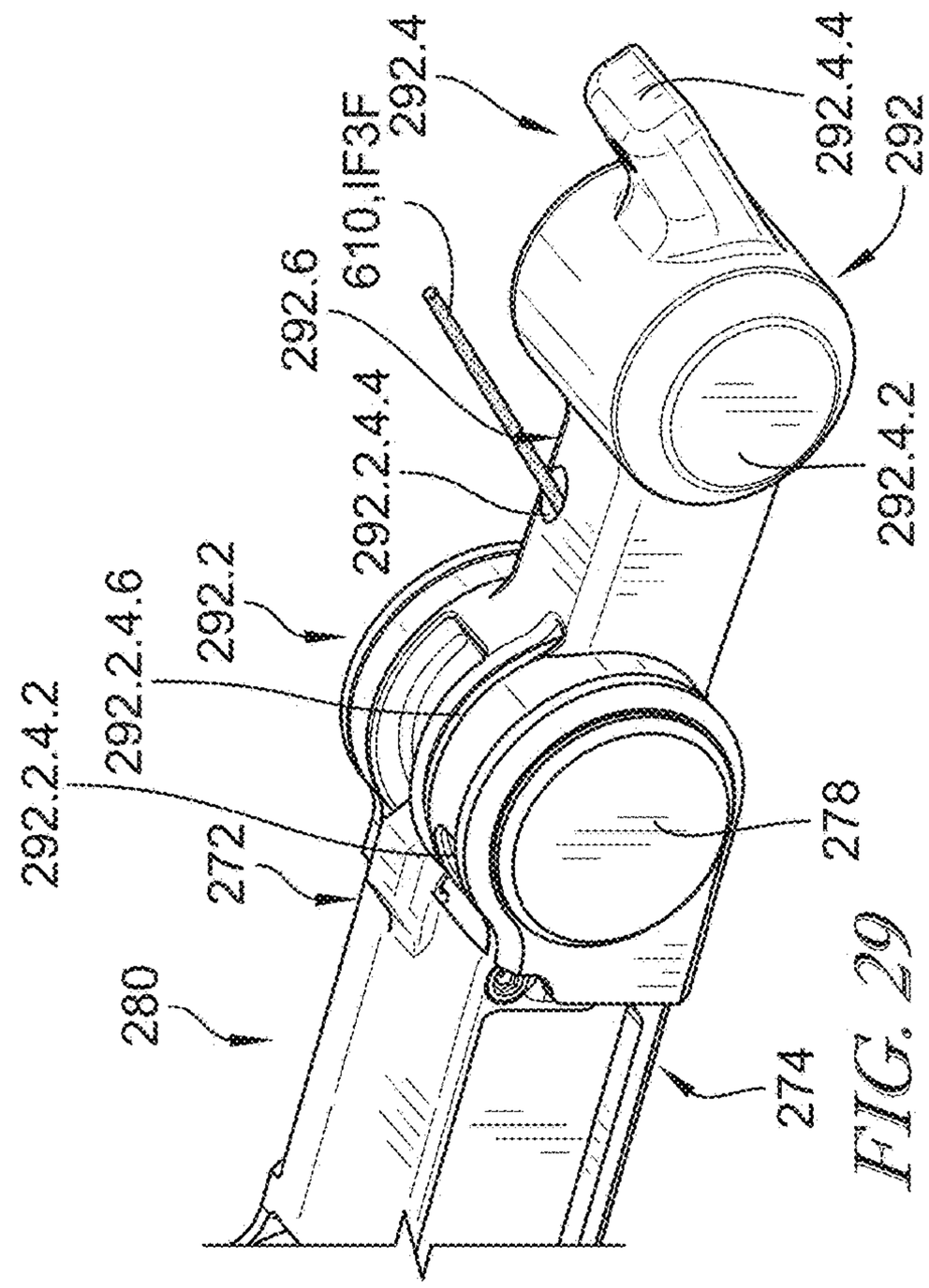
292.4
292.4.4
292
610,IF3F
292.6
292.2.4.4
292.4.2
292.2
292.2.4.6
292.2.4.2
278
272
280
274

FIG. 29

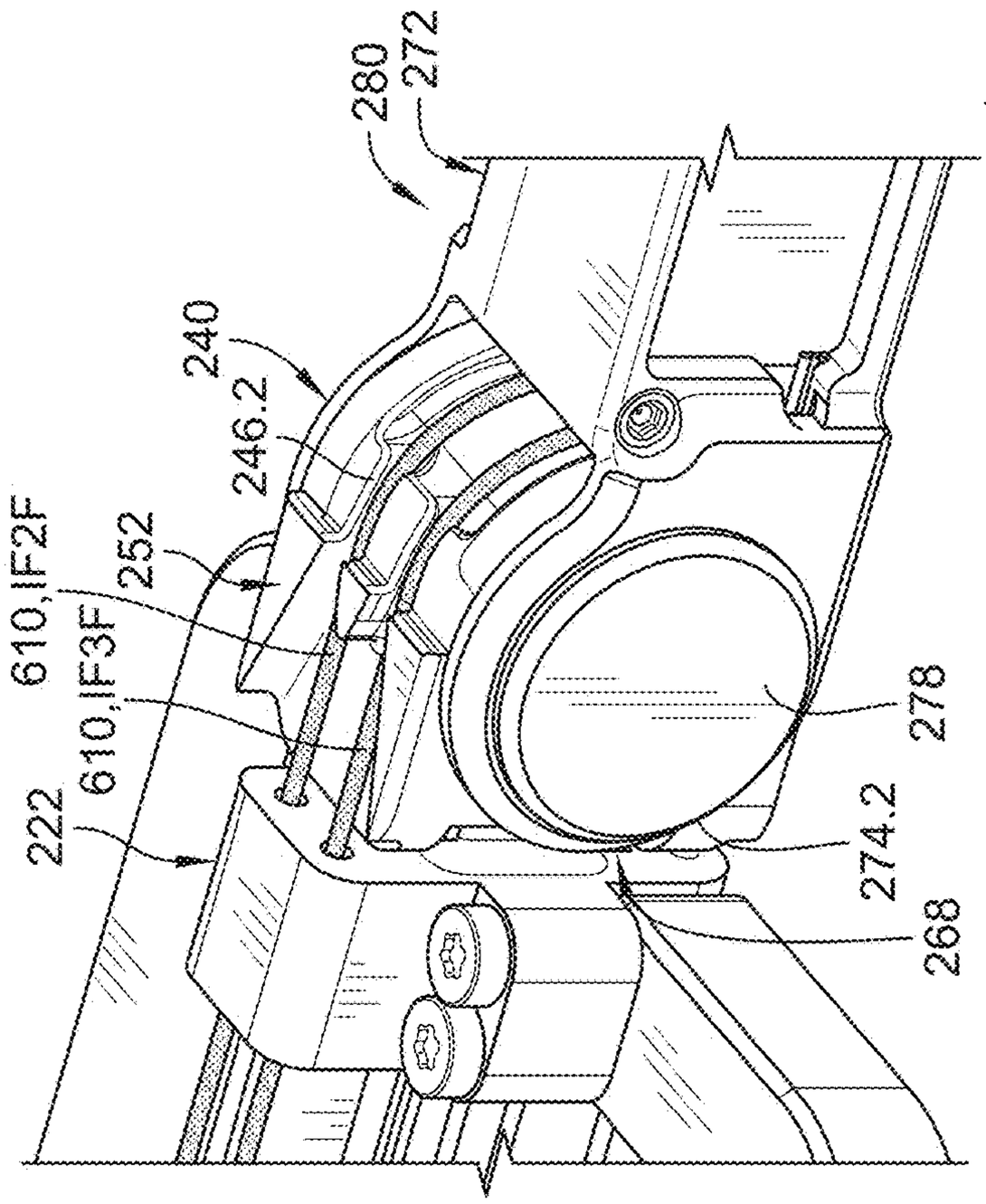
280
272
240
246.2
610,IF2F
252
610,IF3F
222
278
274.2
268

FIG. 28

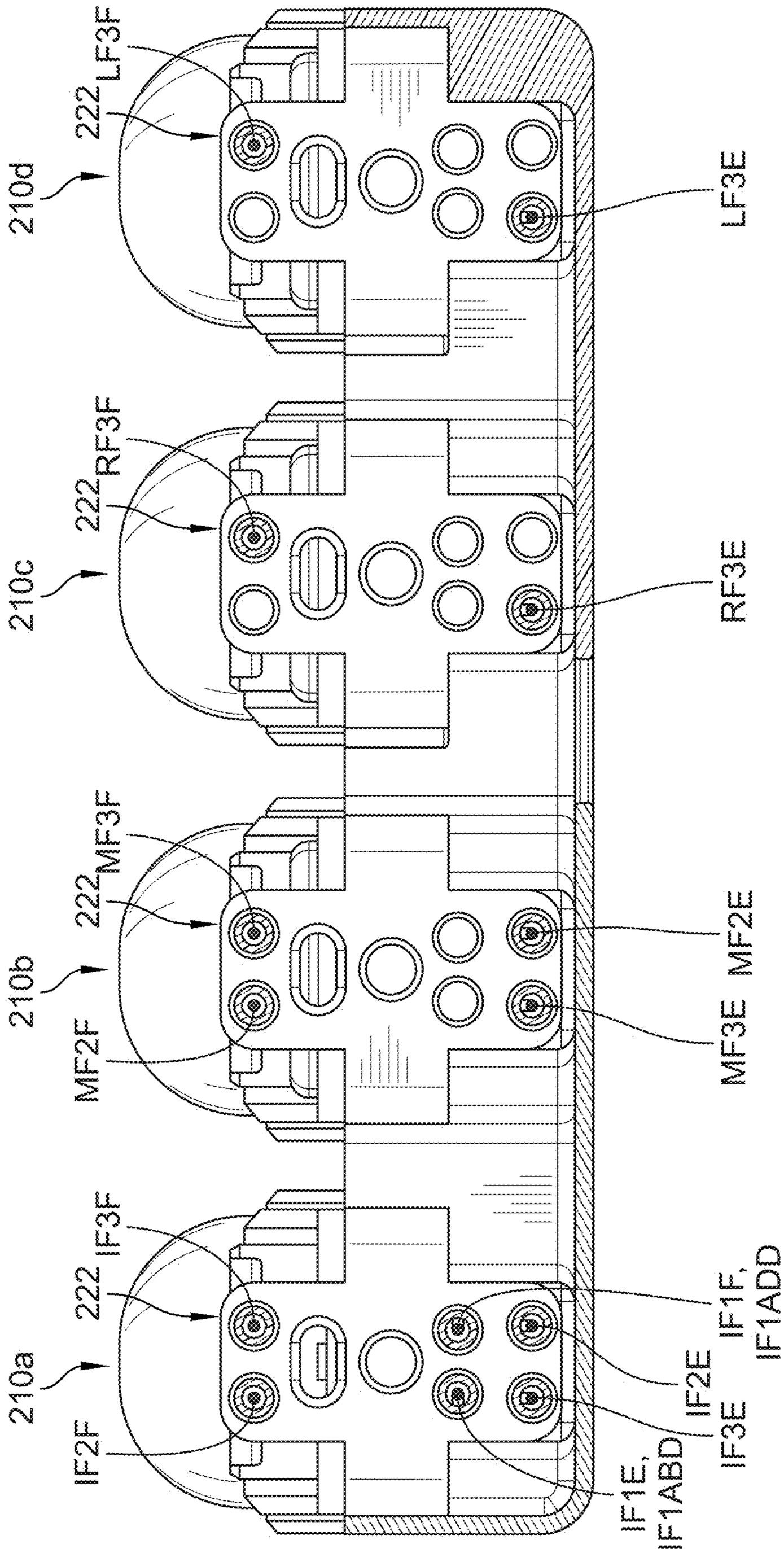
210d
222
LF3F
LF3E
210c
222
RF3F
RF3E
210b
222
MF3F
MF2F
MF2E
MF3E
210a
222
IF3F
IF2F
IF1E,
IF1ABD
IF3E
IF2E
IF1F,
IF1ADD

FIG. 30

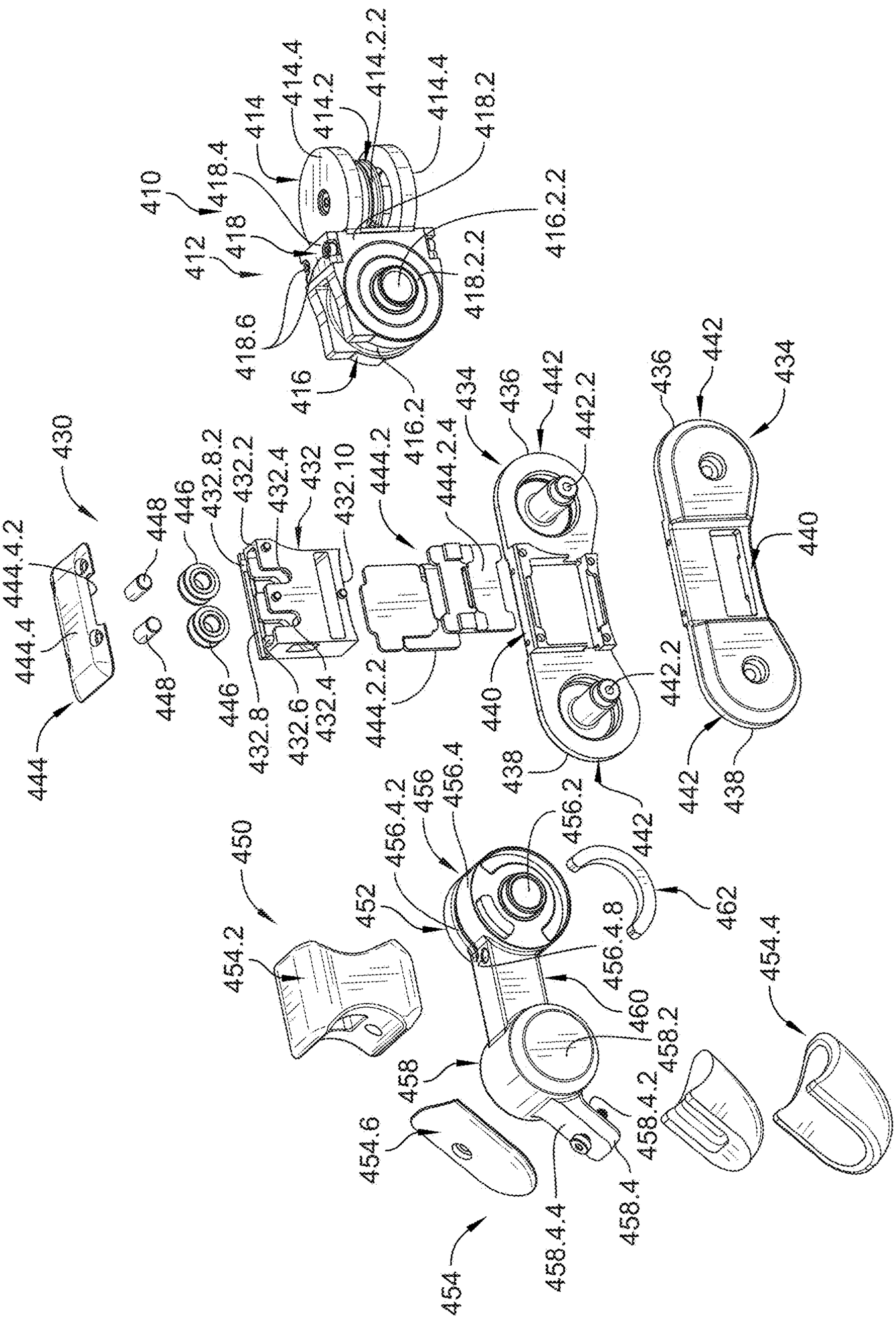
410
412
418
418.4
414
414.4
414.2
414.2.2
414.4
418.2
416.2.2
418.2.2
418.6
416
416.2
434
436
442
442.2
436
442
434
440
430
444.4.2
444.4
444
448
446
432.8.2
432.2
432.4
432
432.10
444.2
444.2.4
432.8
432.6
432.4
444.2.2
440
438
442.2
442
438
450
454.2
452
456.4.2
456
456.4
456.2
442
462
456.4.8
460
458.2
458
458.4.2
454.6
458.4.4
458.4
454.4
454

FIG. 31

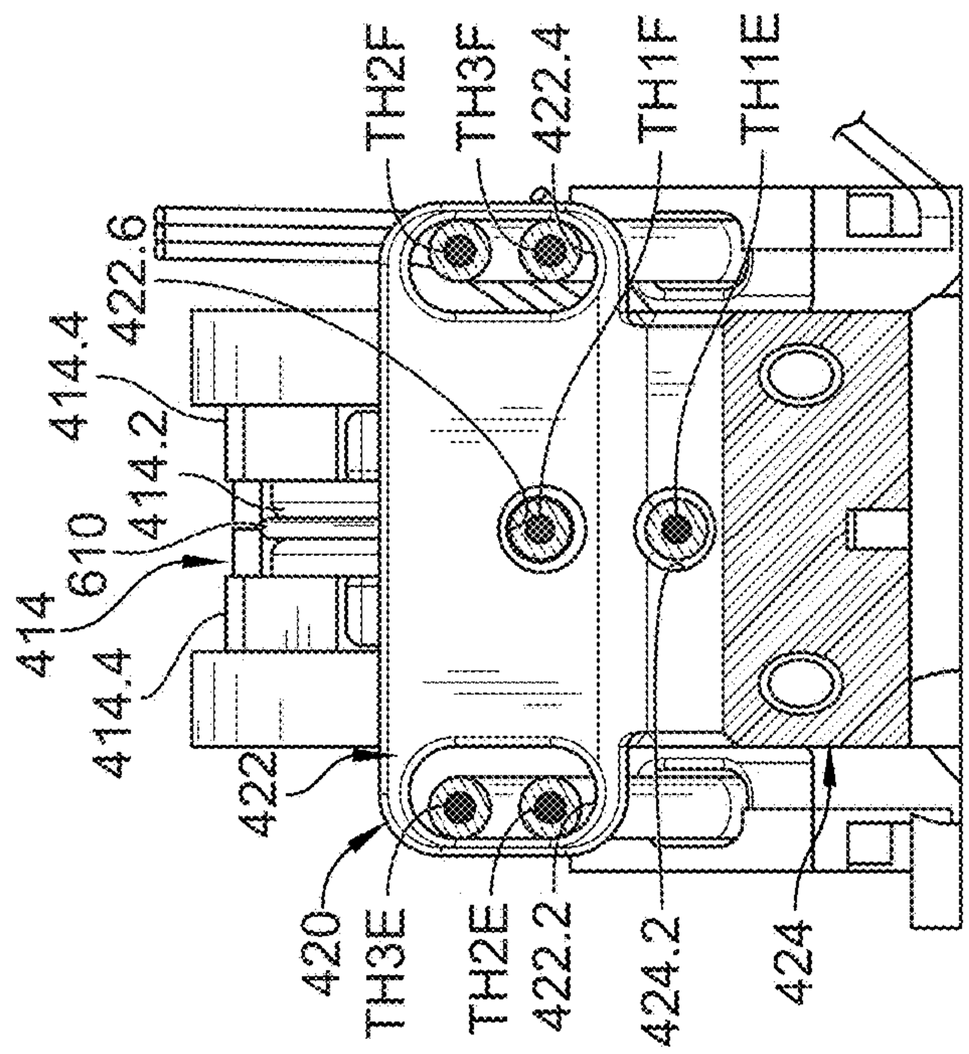
TH2F
TH3F
422.4
TH1F
TH1E
422.6
414.4
414.2
610
414
414.4
422
420
TH3E
TH2E
422.2
424.2
424

FIG. 33

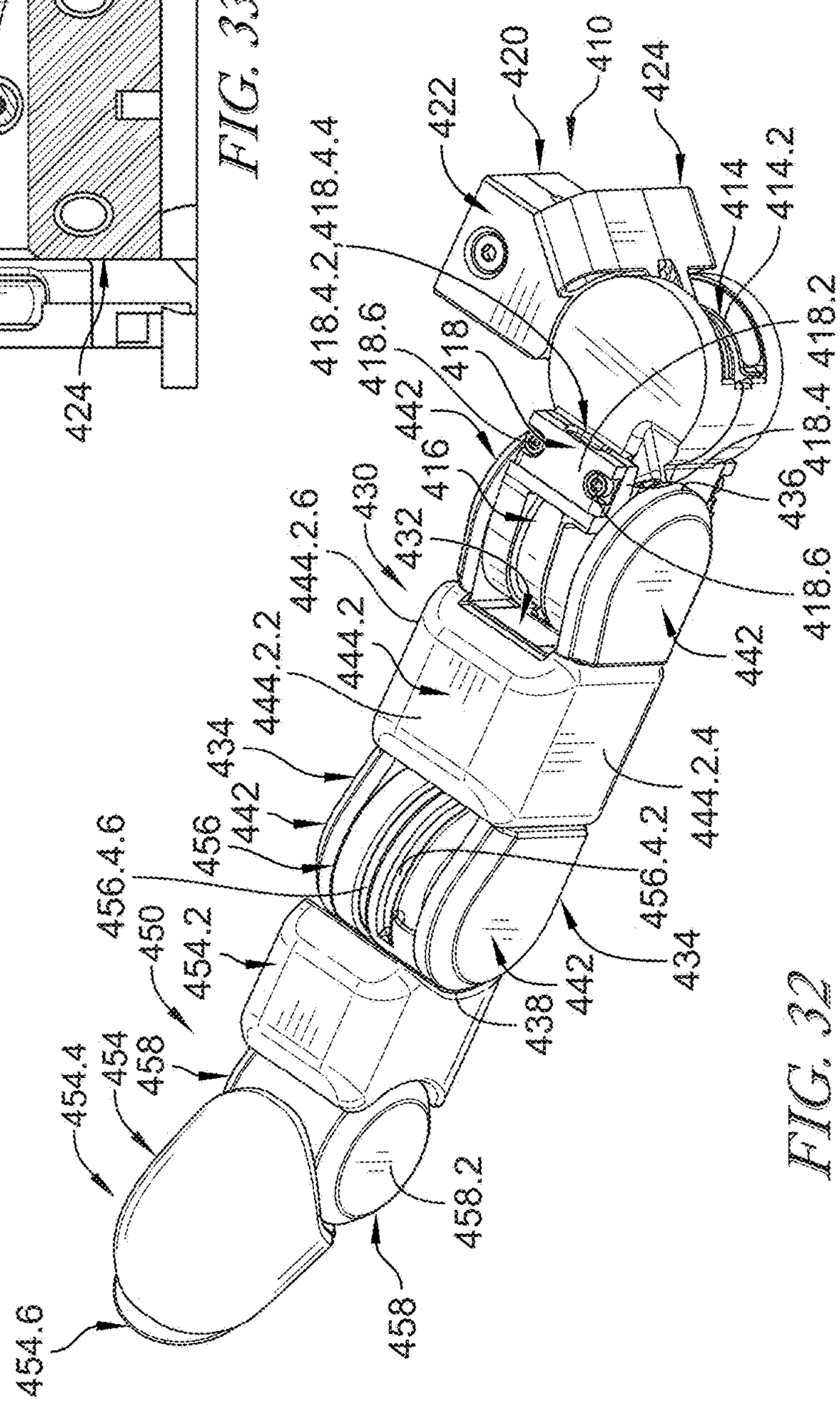
422
420
410
424
414
414.2
418.4.4
418.4.2
418.2
418.6
418
442
416
418.4
436
430
432
444.2.6
444.2.2
444.2
434
442
456
456.4.6
450
454.2
454.4
454
458
458.2
458
454.6
438
442
444.2.4
456.4.2
434

FIG. 32

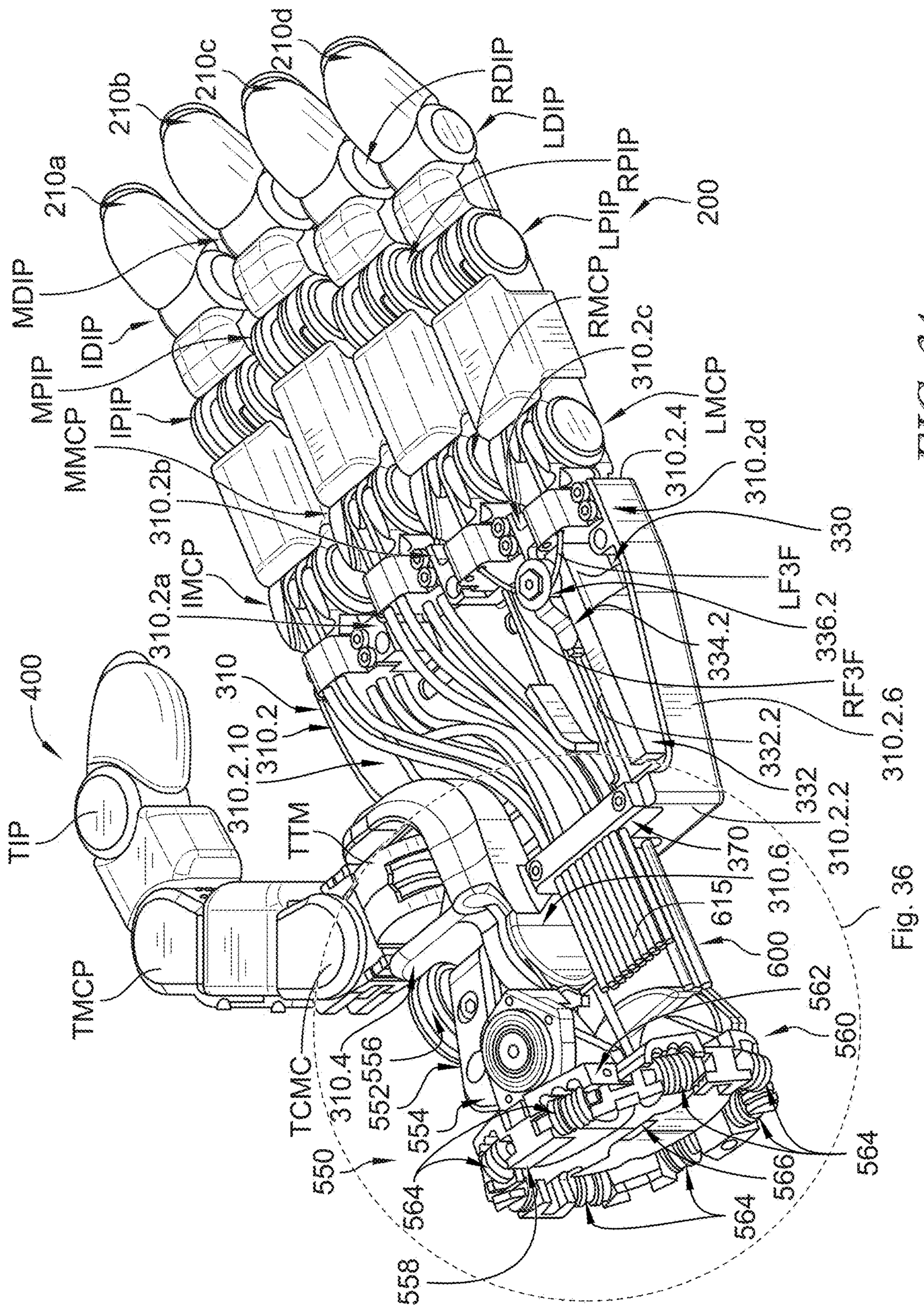
210a
210b
210c
210d
RDIP
LDIP
RPIP
LPIP
200
MDIP
MPIP
IDIP
MMCP
IPIP
RMCP
310.2c
LMCP
310.2.4
310.2d
330
310.2b
310.2a
IMCP
LF3F
336.2
334.2
RF3F
310.2.6
400
310
310.2
310.2.10
332.2
332
310.2.2
TIP
TTM
370
310.6
615
600
Fig. 36
TMCP
562
560
TCMC
310.4
556
552
554
550
564
566
564
558

FIG. 34

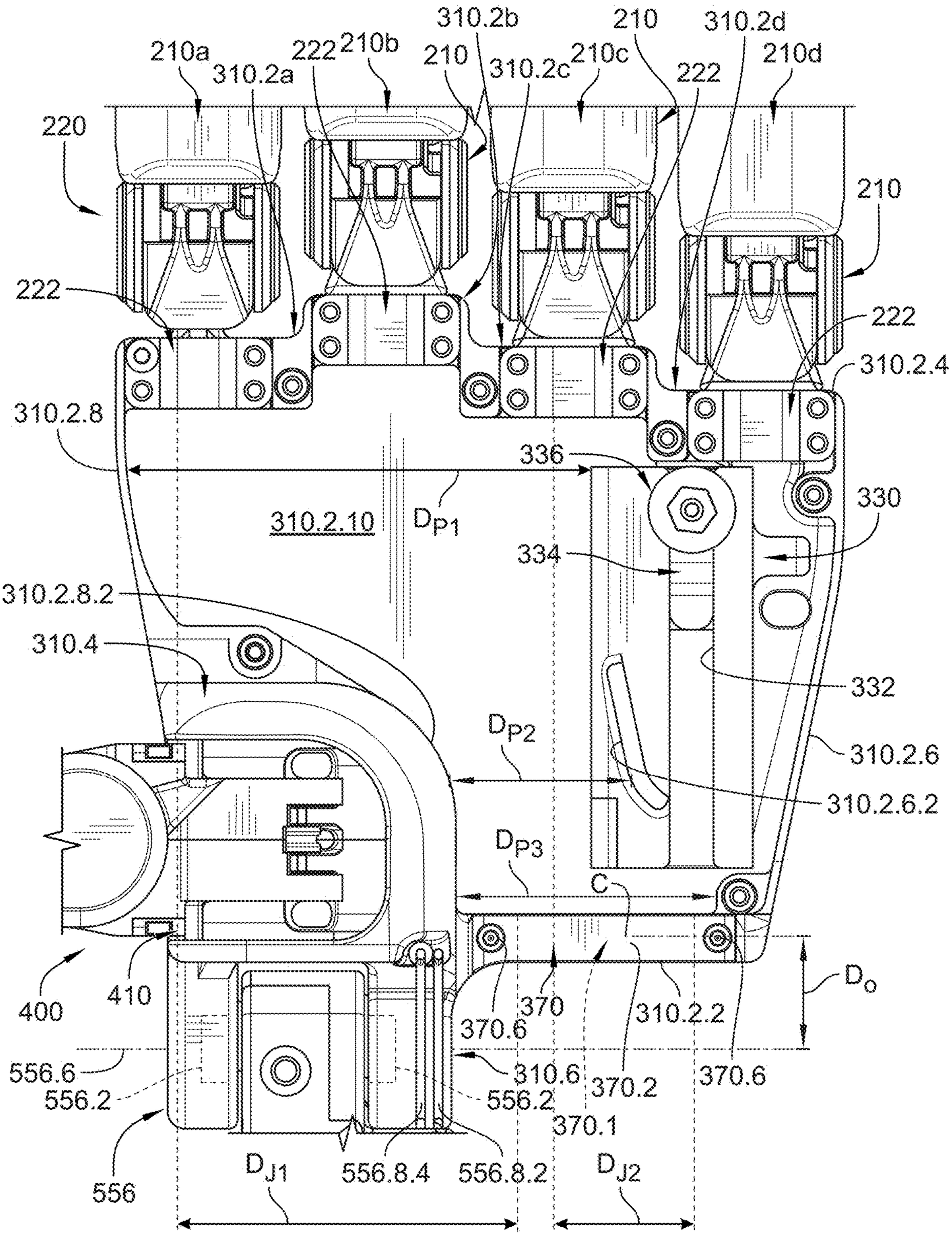
310.2b
210
310.2d
210a
222
210b
210
310.2c
210c
222
210d
310.2a
220
210
222
222
310.2.4
310.2.8
336
330
310.2.10
D_{P1}
334
310.2.8.2
310.4
332
D_{P2}
310.2.6
310.2.6.2
D_{P3}
C
400
410
370
310.2.2
D_O
370.6
556.6
310.6
370.2
370.6
556.2
556.2
370.1
556
D_{J1}
556.8.4
556.8.2
D_{J2}

FIG. 35

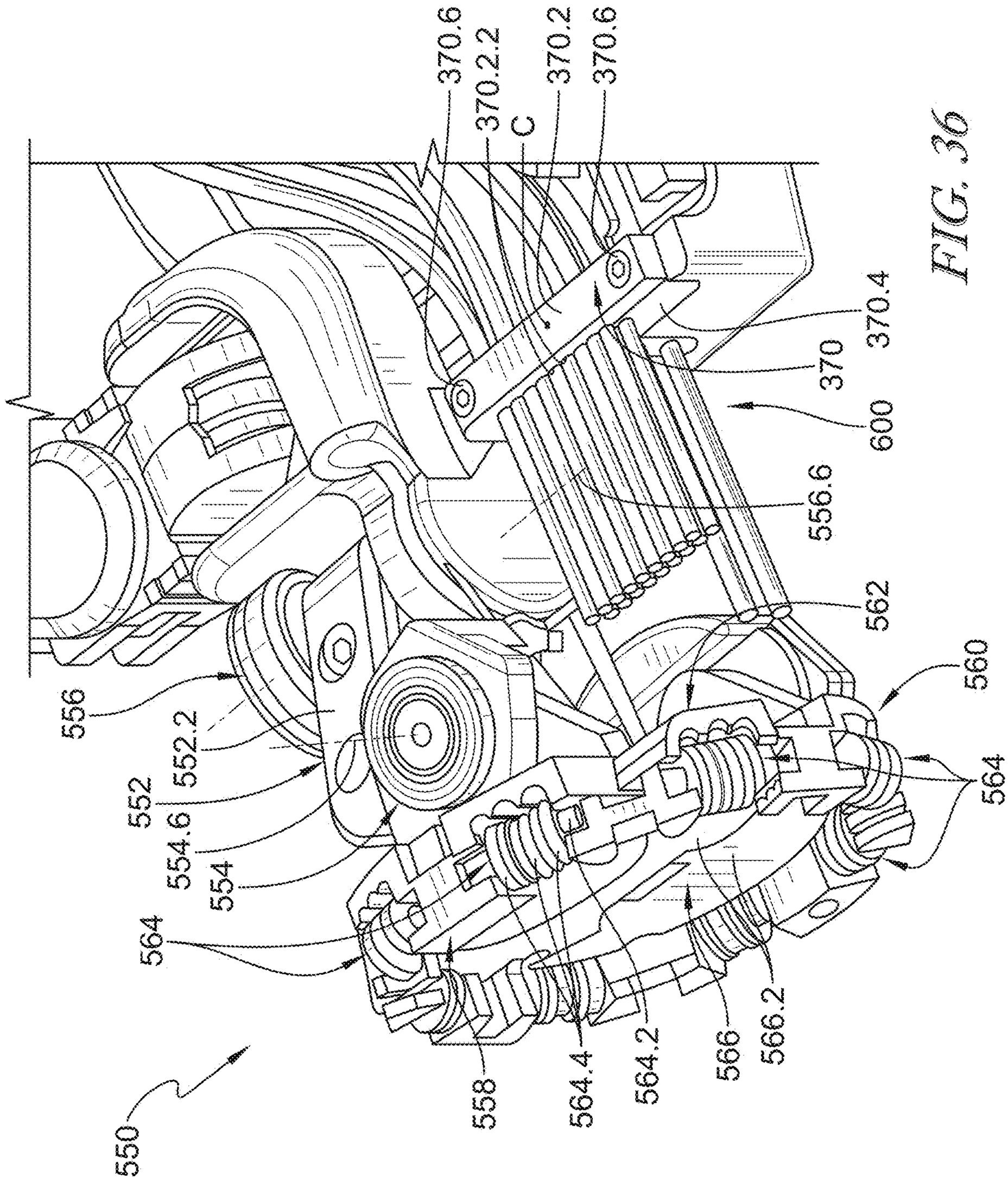
370.6
370.2.2
C
370.2
370.6
370.4
370
600
556.6
562
560
564
556
552.2
552
554.6
554
564
558
564.4
564.2
566
566.2
550

FIG. 36

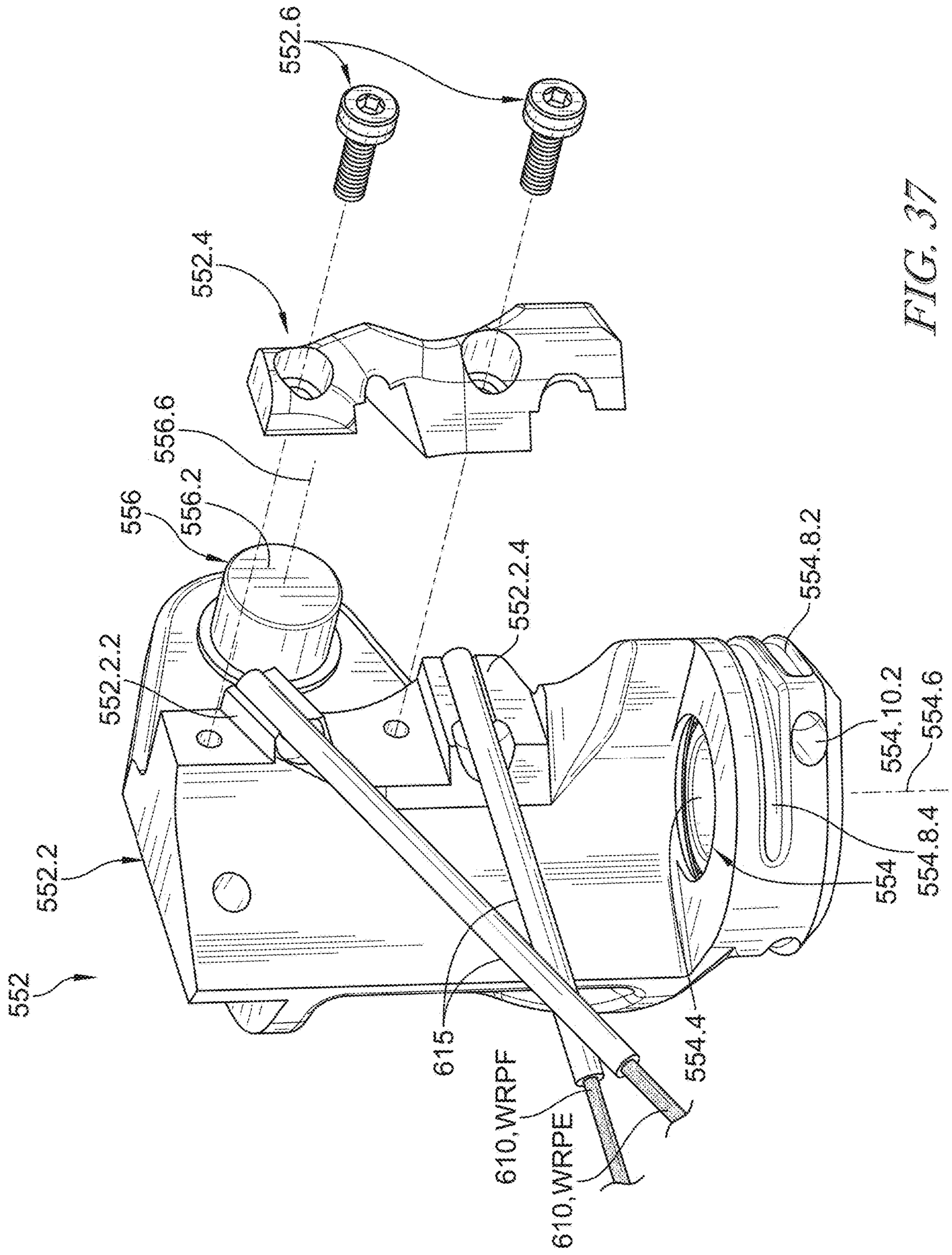
552.6
552.4
556.6
556
556.2
552.2.4
552.2.2
554.8.2
554.10.2
554.6
554.8.4
552.2
554
552
615
610,WRPF
610,WRPE
554.4

FIG. 37

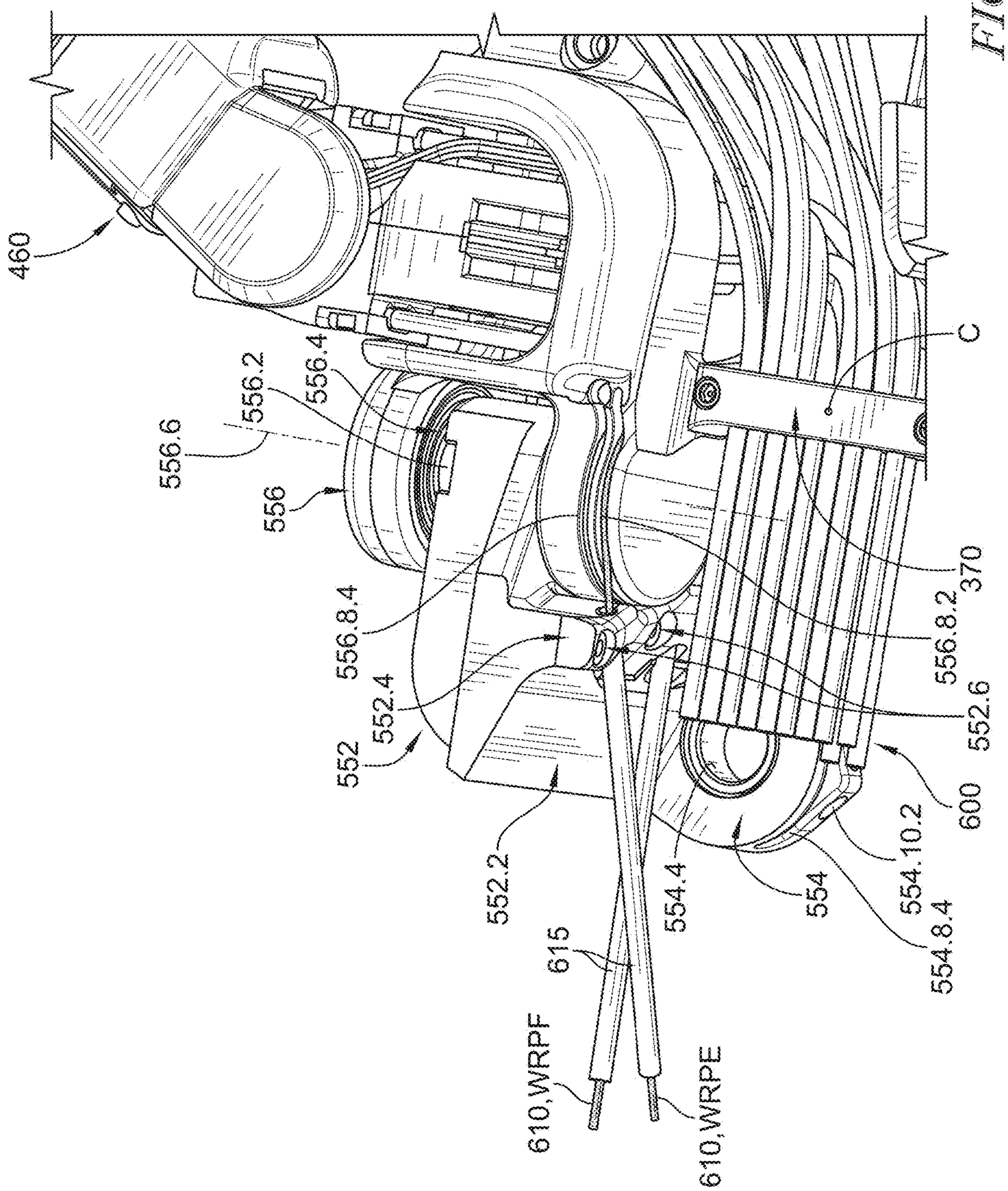
460
556.6
556.2
556.4
556
556.8.4
552.4
552
552.2
615
610,WRPF
610,WRPE
554.4
554
554.8.4
554.10.2
600
552.6
556.8.2
370
C

FIG. 38

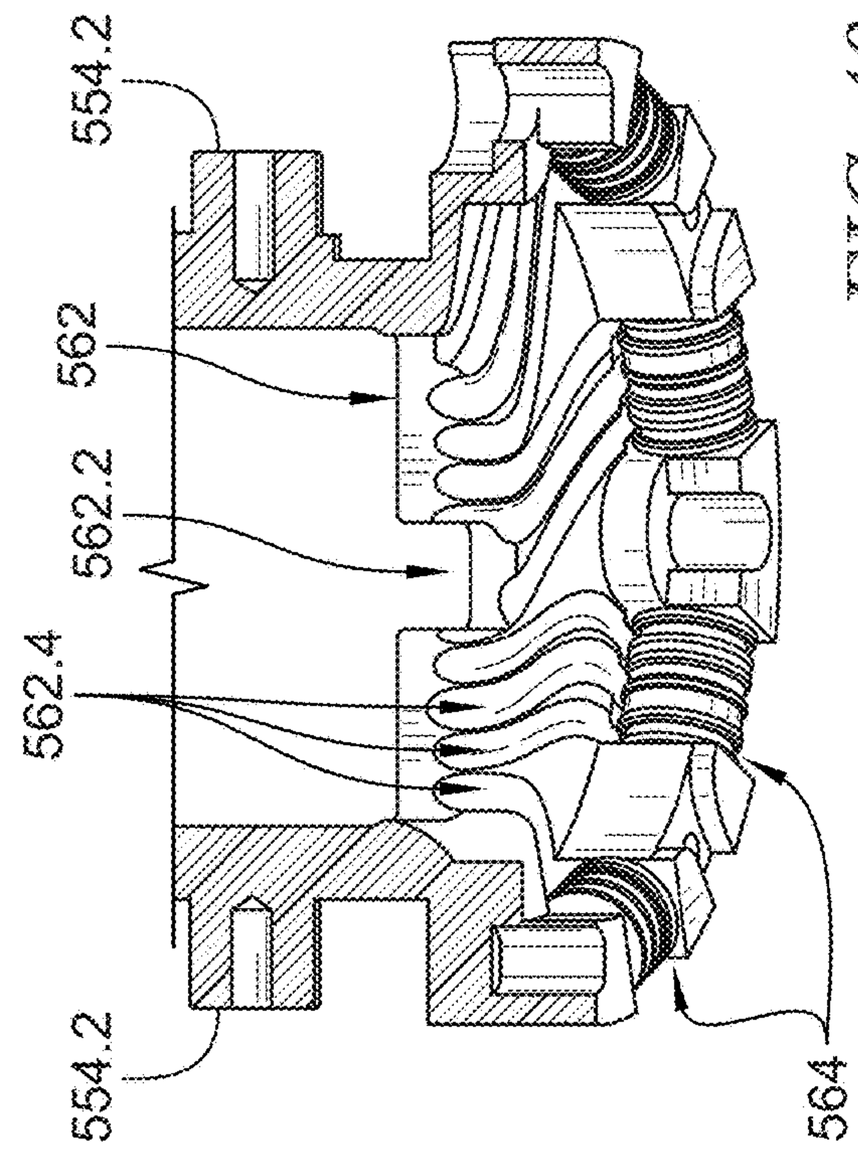
554.2
562
562.2
562.4
554.2
564

FIG. 40

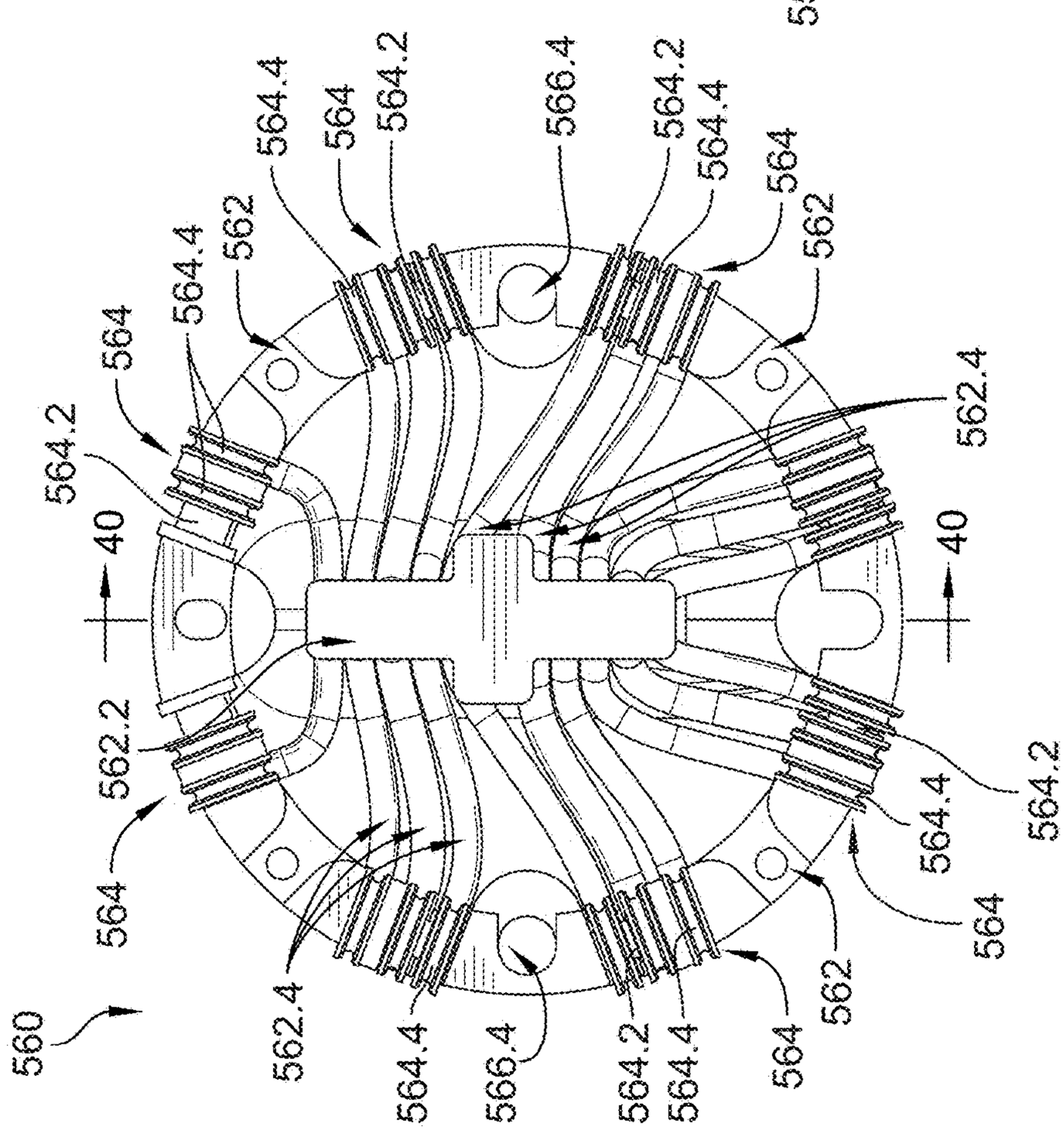
564.4
564
564.2
566.4
564.2
564.4
564
562
562
564.4
564
564.2
562.4
40
40
562.2
564
562.4
564.2
564.4
564
562
560
562.4
564.4
566.4
564.2
564.4
564

FIG. 39

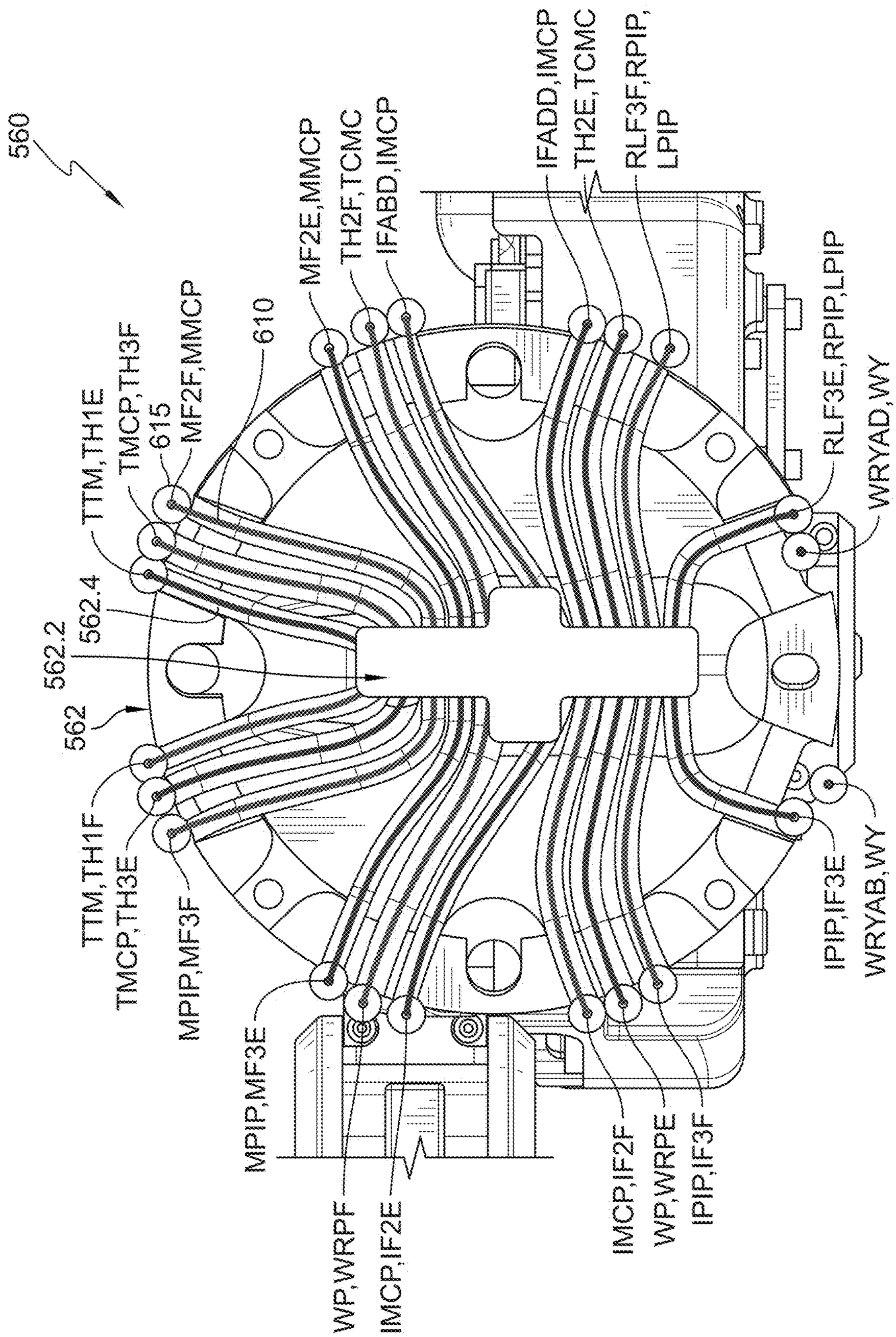
560
562
562.2
562.4
TTM,TH1E
TMCP,TH3F
615
MF2F,MMCP
610
MF2E,MMCP
TH2F,TCMC
IFABD,IMCP
IFADD,IMCP
TH2E,TCMC
RLF3F,RPIP,
LPIP
TTM,TH1F
TMCP,TH3E
MPIP,MF3F
MPIP,MF3E
WP,WRPF
IMCP,IF2E
IMCP,IF2F
WP,WRPE
IPIP,IF3F
IPIP,IF3E
WRYAB,WY
RLF3E,RPIP,LPIP
WRYAD,WY

FIG. 41

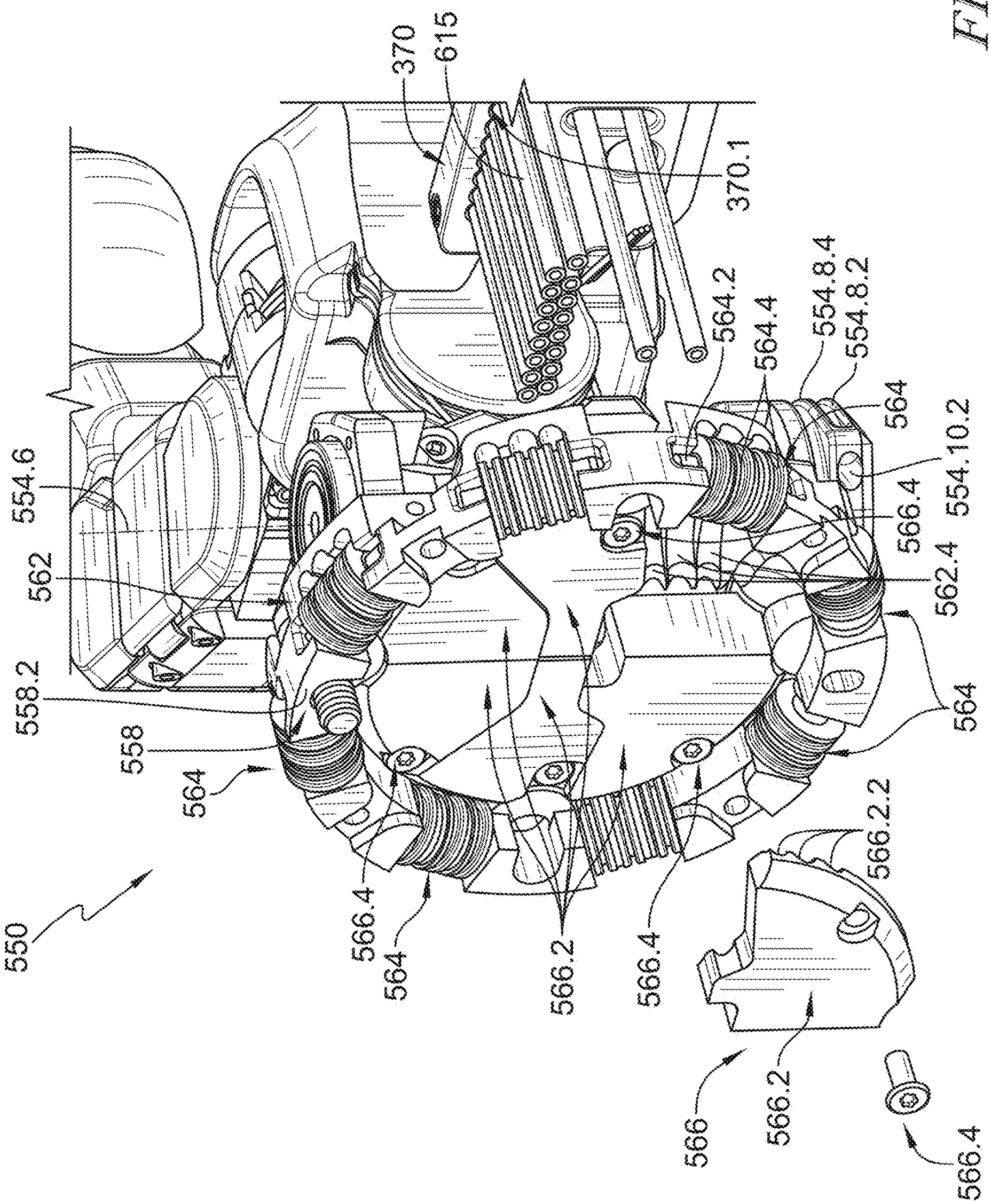
370
615
370.1
564.2
564.4
554.8.4
554.8.2
564
554.10.2
566.4
562.4
564
554.6
562
558.2
558
564
550
566.4
564
566.2
566.4
566.2.2
566
566.2
566.4

FIG. 42

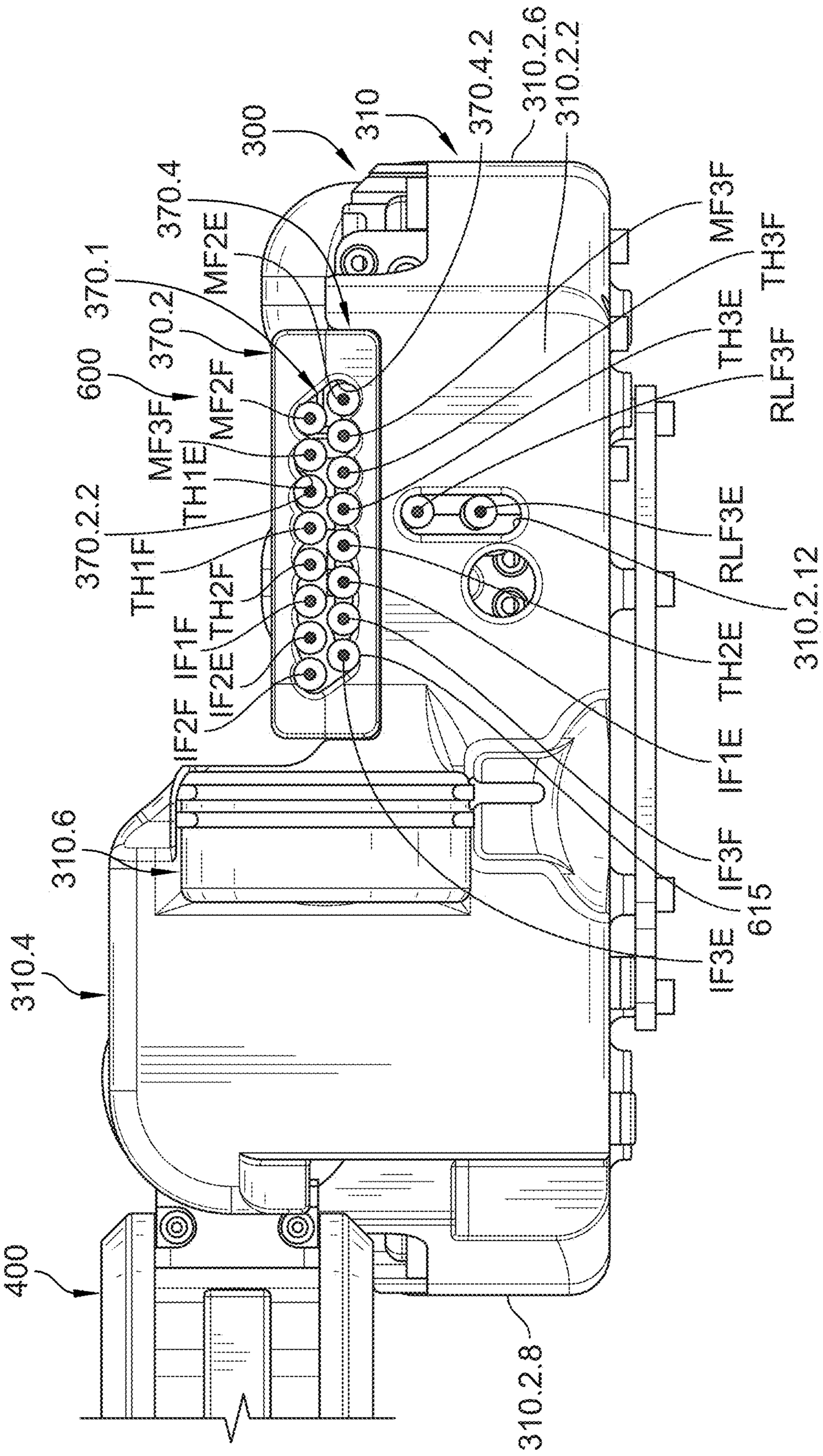
300
310
370.4.2
310.2.6
310.2.2
370.4
MF2E
370.1
370.2
600
MF3F
MF2F
TH1E
370.2.2
TH1F
TH2F
IF1F
IF2E
IF2F
MF3F
TH3F
TH3E
RLF3F
RLF3E
310.2.12
TH2E
IF1E
IF3F
615
IF3E
310.6
310.4
400
310.2.8

FIG. 43

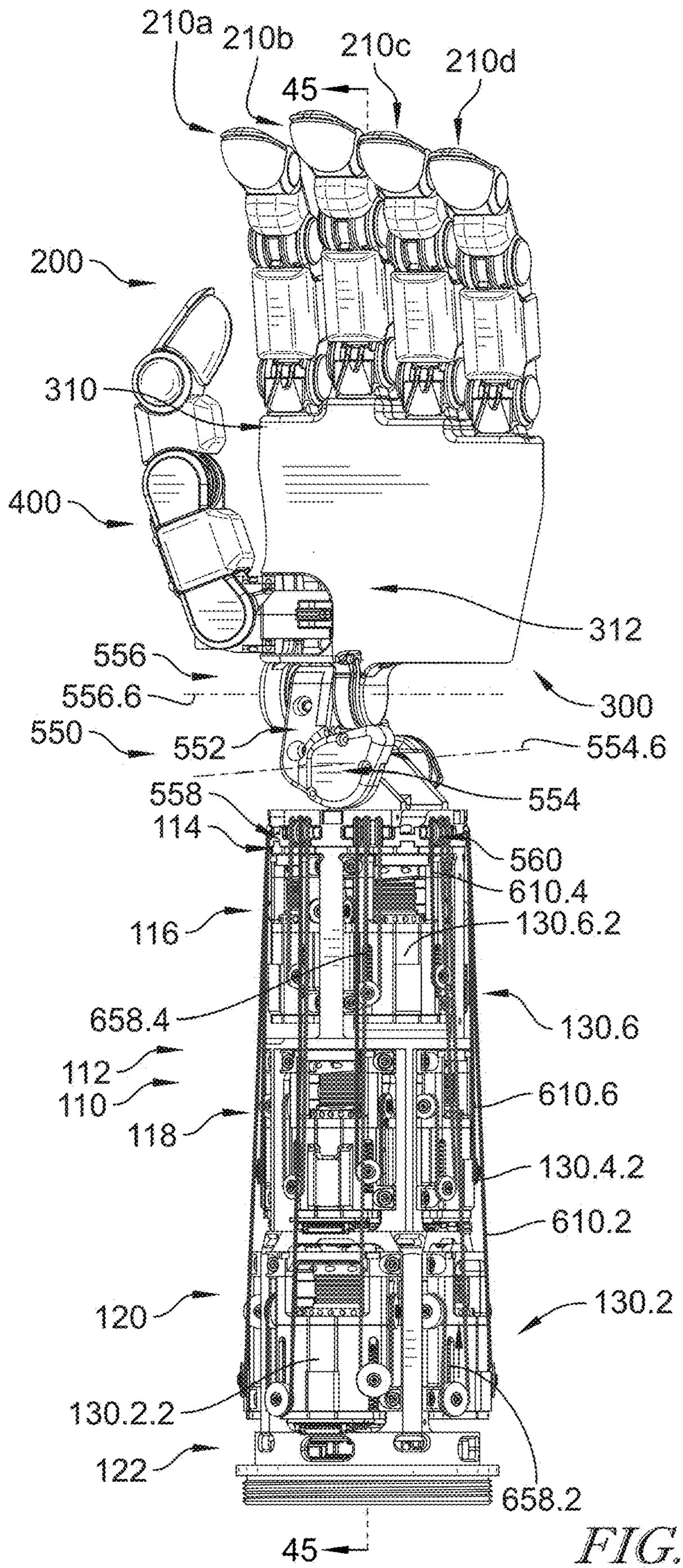
210a
210b
210c
210d
45
200
310
400
312
556
556.6
300
550
552
554.6
558
554
114
560
610.4
116
130.6.2
658.4
130.6
112
110
610.6
118
130.4.2
610.2
120
130.2
130.2.2
122
658.2
45

FIG. 44A

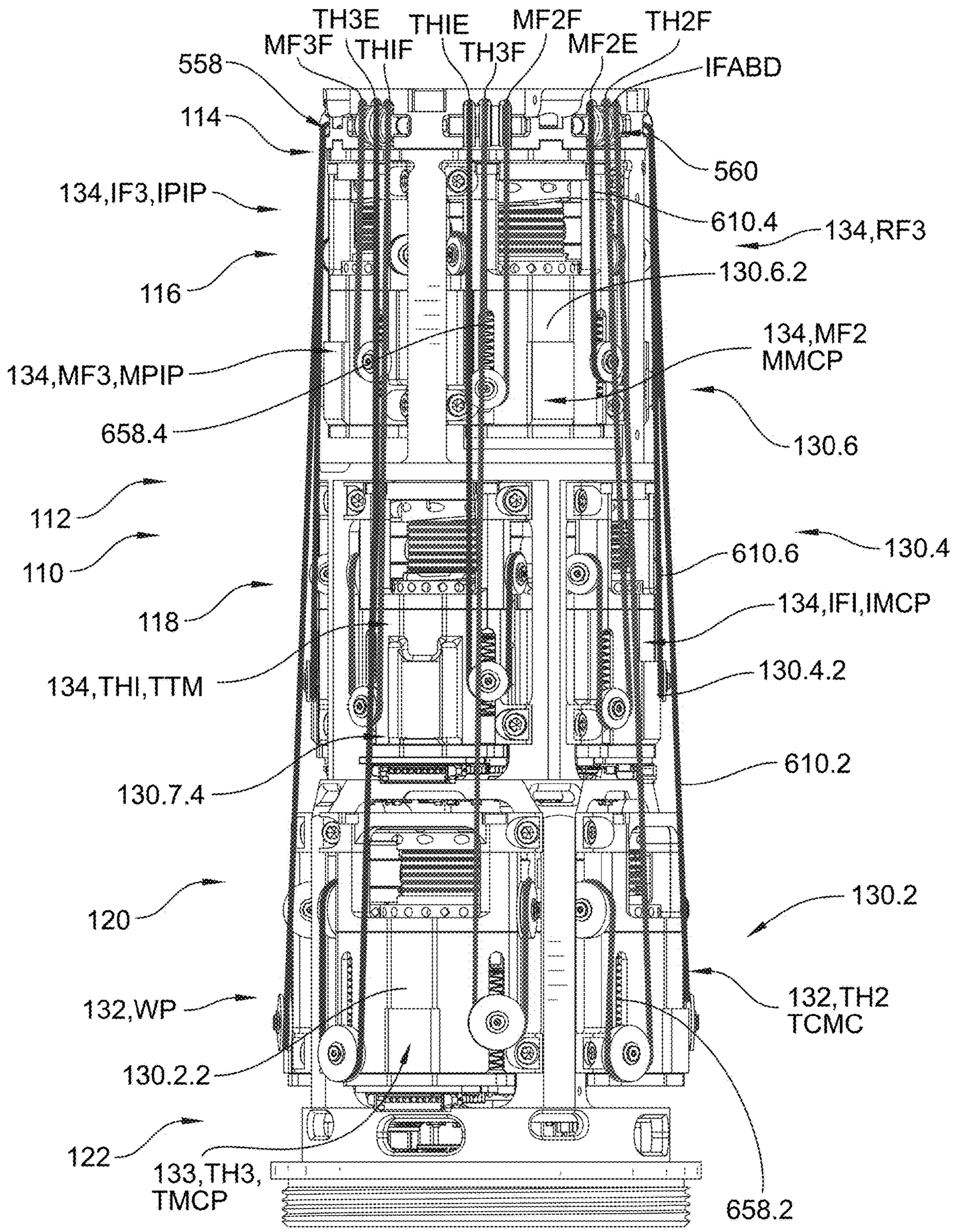
TH3E
THIE
MF2F
TH2F
MF3F
THIF
TH3F
MF2E
558
IFABD
114
560
134,IF3,IPIP
610.4
134,RF3
116
130.6.2
134,MF2
MMCP
134,MF3,MPIP
658.4
130.6
112
110
610.6
130.4
118
134,IFI,IMCP
134,THI,TTM
130.4.2
610.2
130.7.4
120
130.2
132,WP
132,TH2
TCMC
130.2.2
122
133,TH3,
TMCP
658.2

FIG. 44B

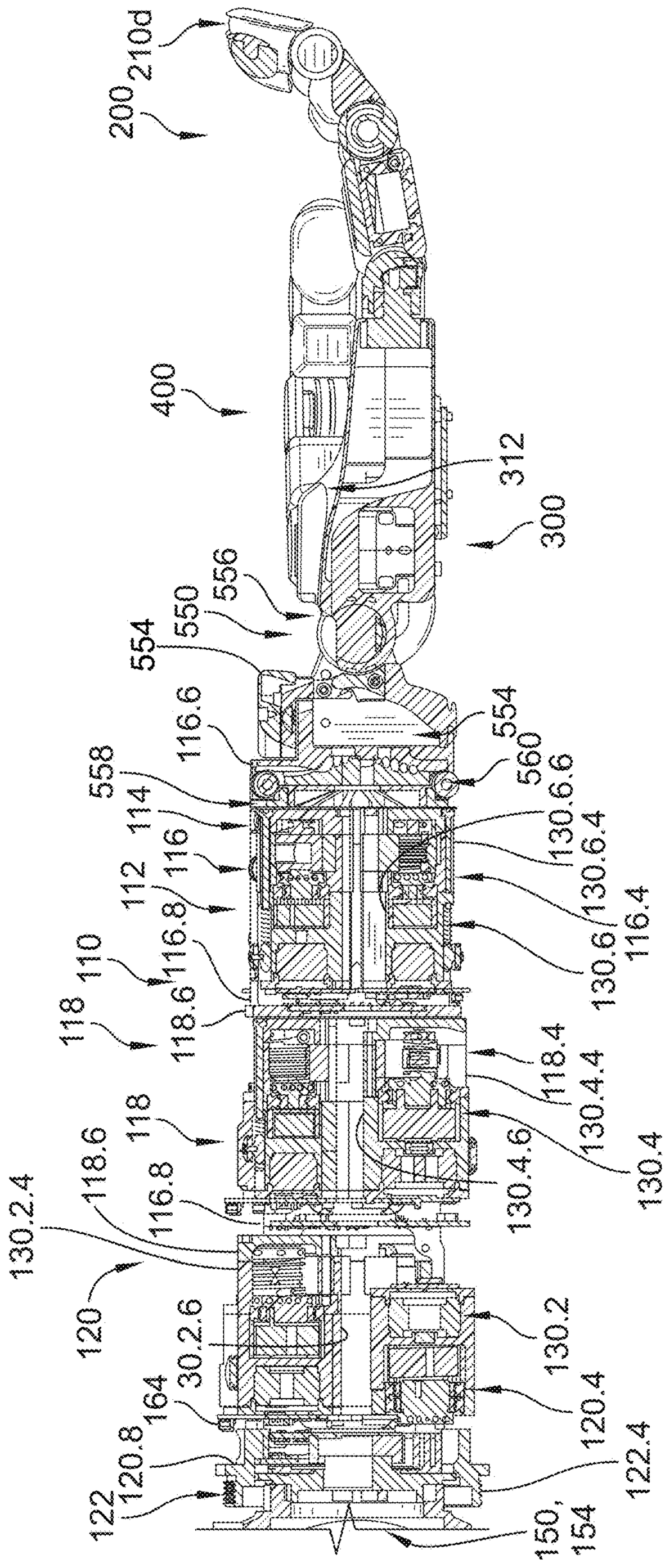
200
210d
400
312
300
556
550
554
116.6
558
114
116
112
116.8
110
118
118.6
118.8
130.2.4
120
30.2.6
164
120.8
122
150,
154
122.4
120.4
130.2
130.4
130.4.6
130.4.4
118.4
116.4
130.6
130.6.4
130.6.6
560
554

FIG. 45A

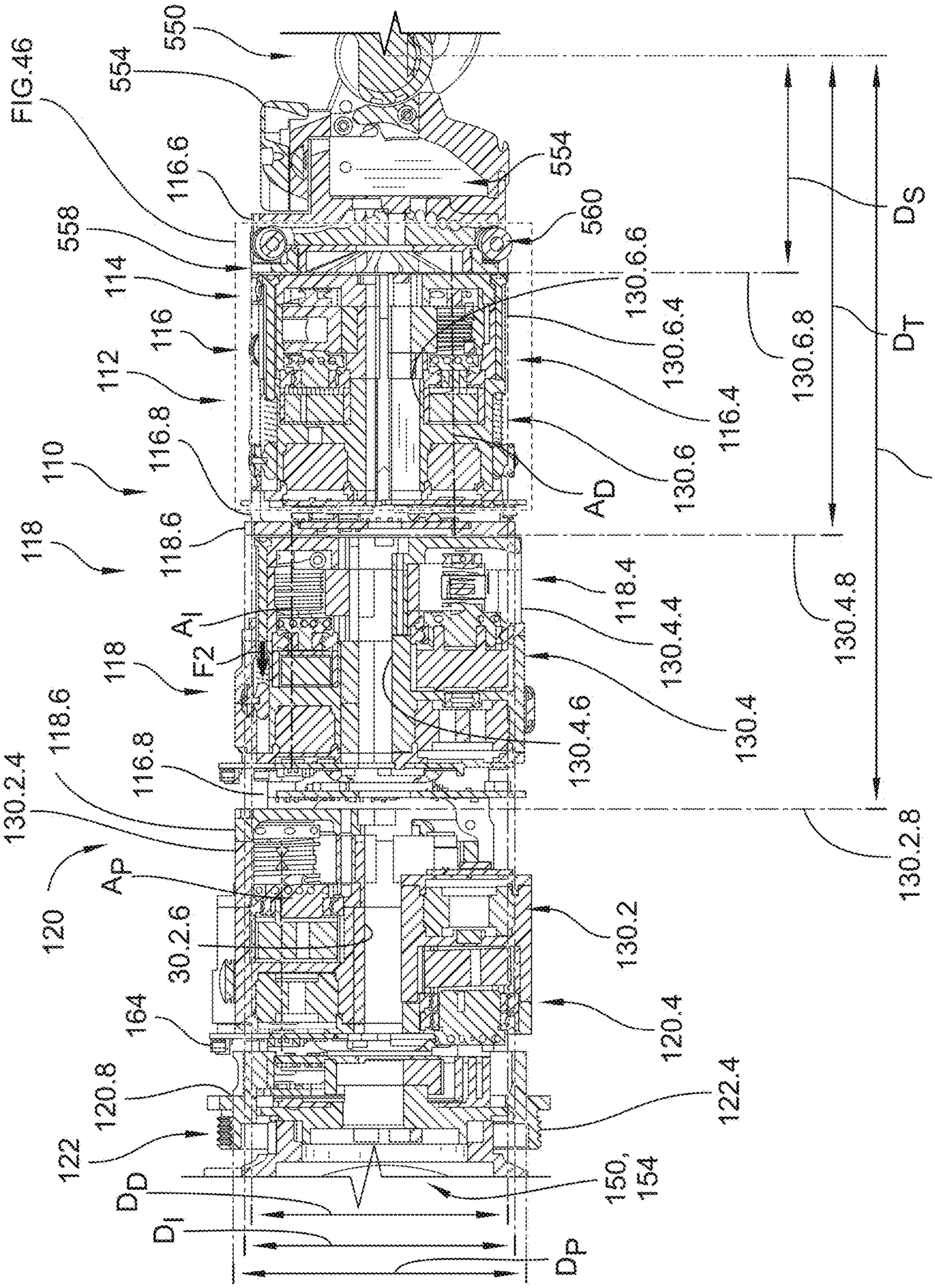
FIG.46
550
554
116.6
558
114
116
112
110
116.8
118
118.6
118
118.6
116.8
130.2.4
120
A_P
30.2.6
164
120.8
122
D_D
D_I
D_P
A_I
F_2
554
560
130.6.6
130.6.4
130.6.8
116.4
130.6
A_D
118.4
130.4.4
130.4.8
130.4.6
130.4
130.2.8
130.2
120.4
122.4
150,
154
D_S
D_T
D_F

FIG. 45B

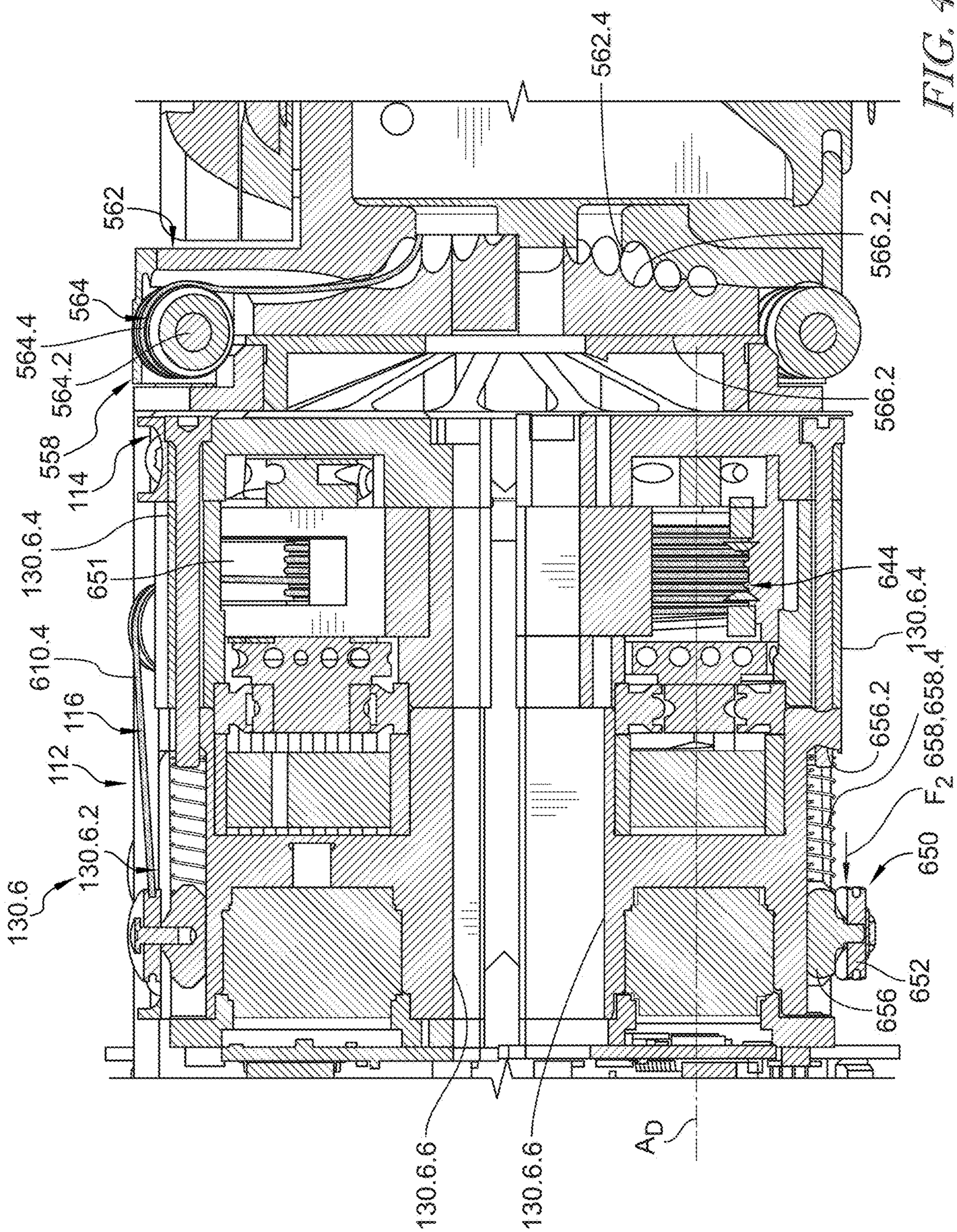
562
564
564.4
564.2
558
114
130.6.4
651
610.4
116
112
130.6.2
130.6
562.4
566.2.2
566.2
644
130.6.4
656.2
658,658.4
F_2
650
652
656
A_D
130.6.6
130.6.6

FIG. 46

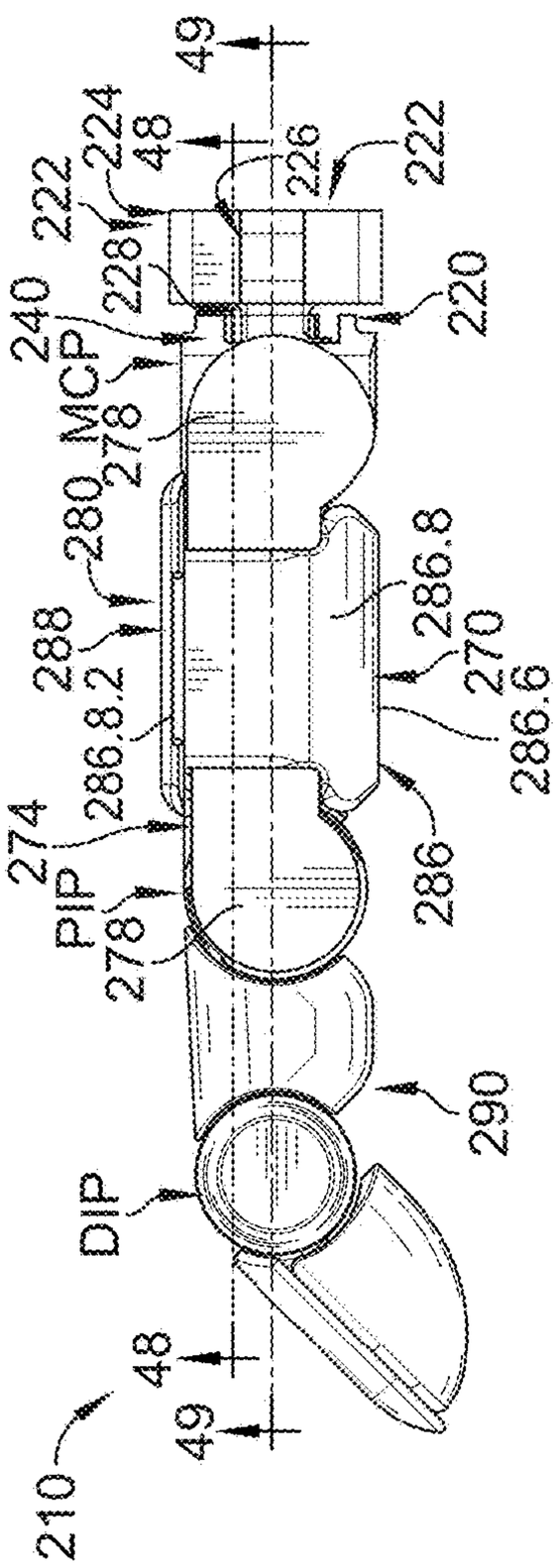

FIG. 47

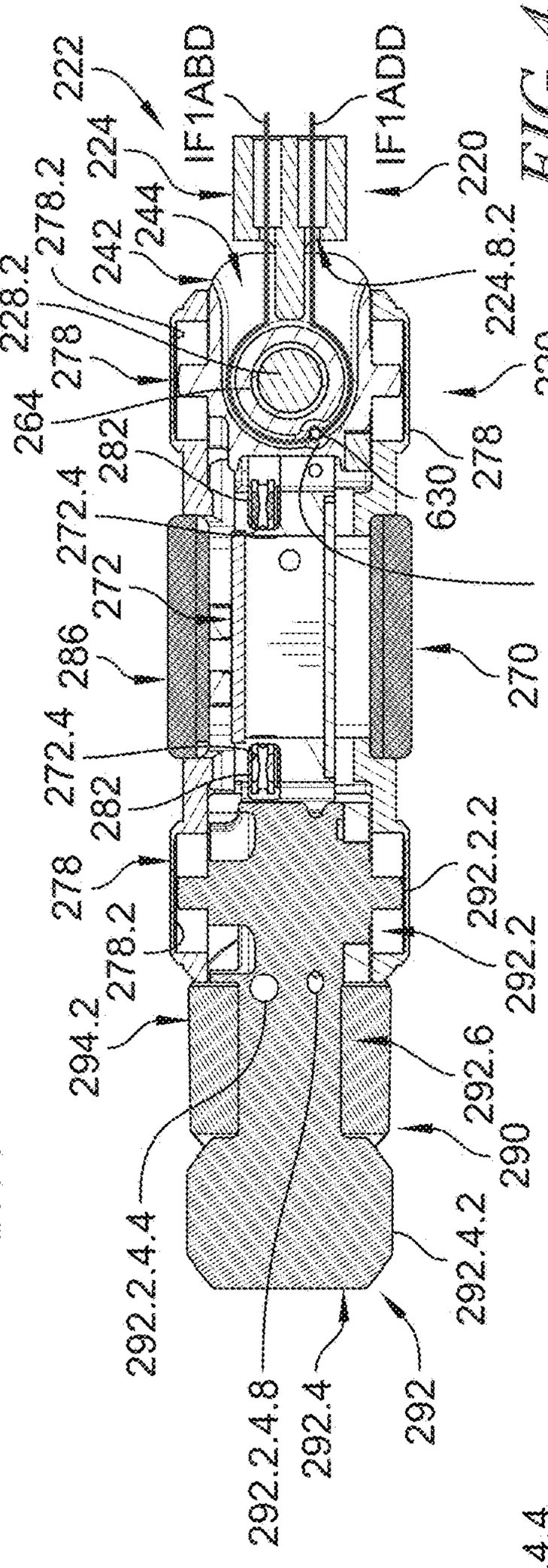

FIG. 48

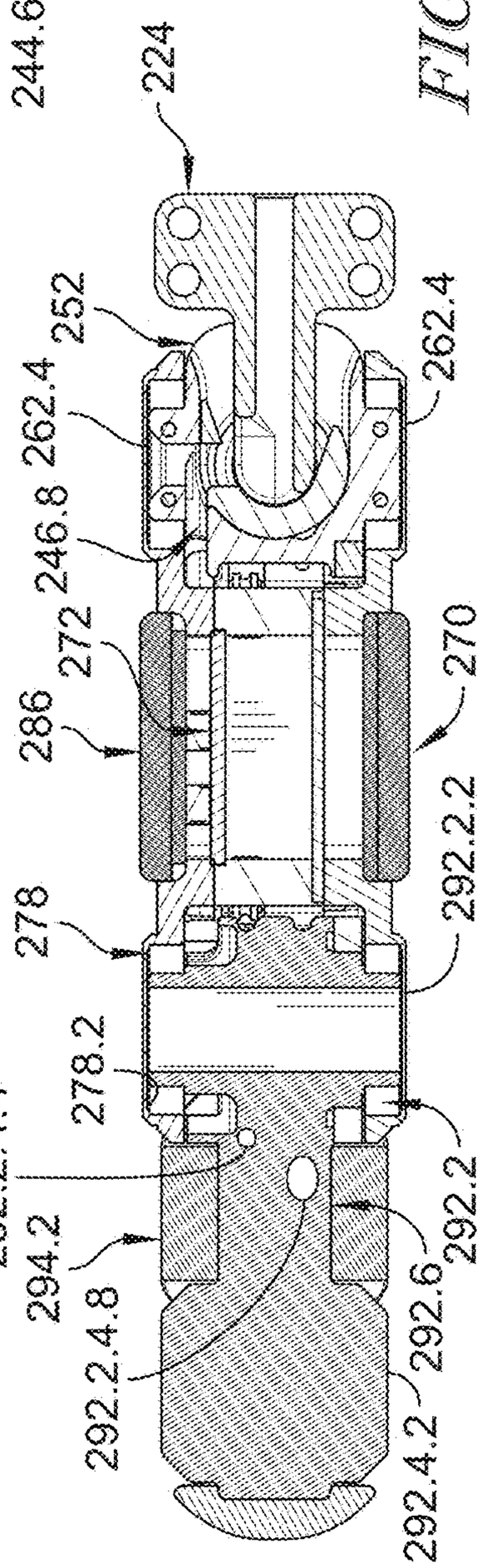

FIG. 49

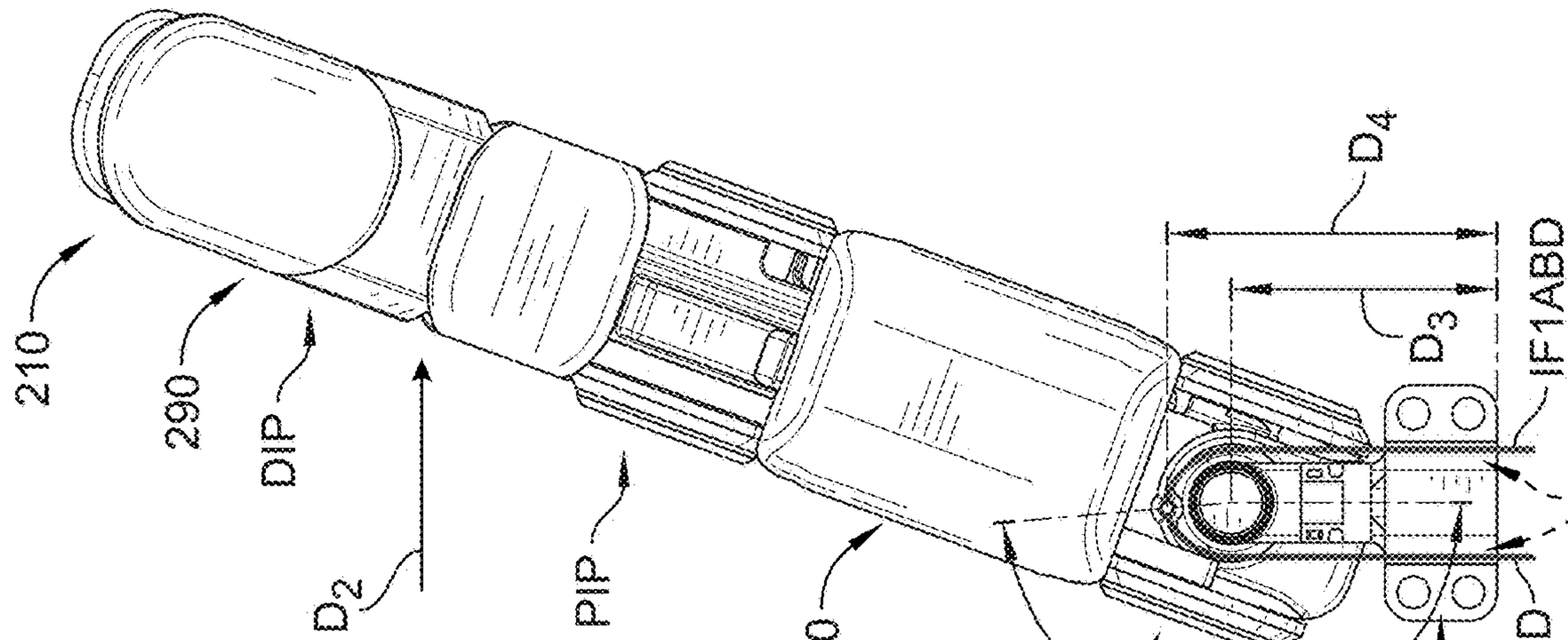

FIG. 52

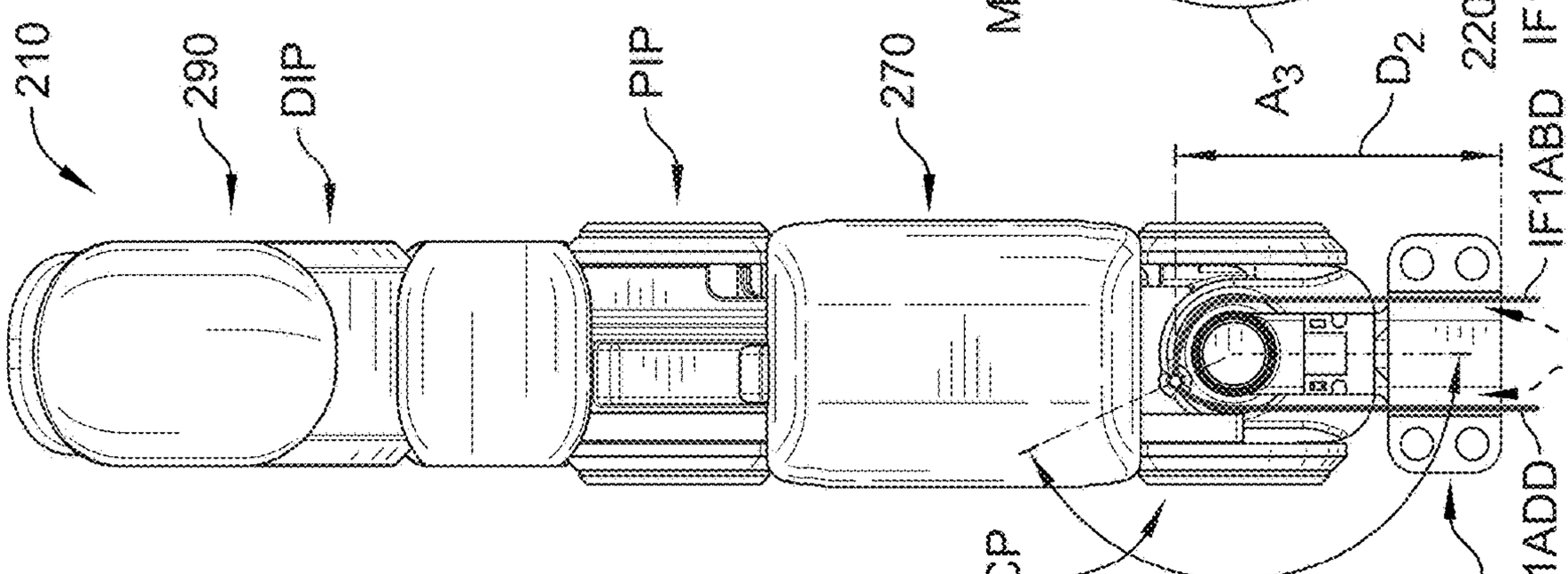

FIG. 51

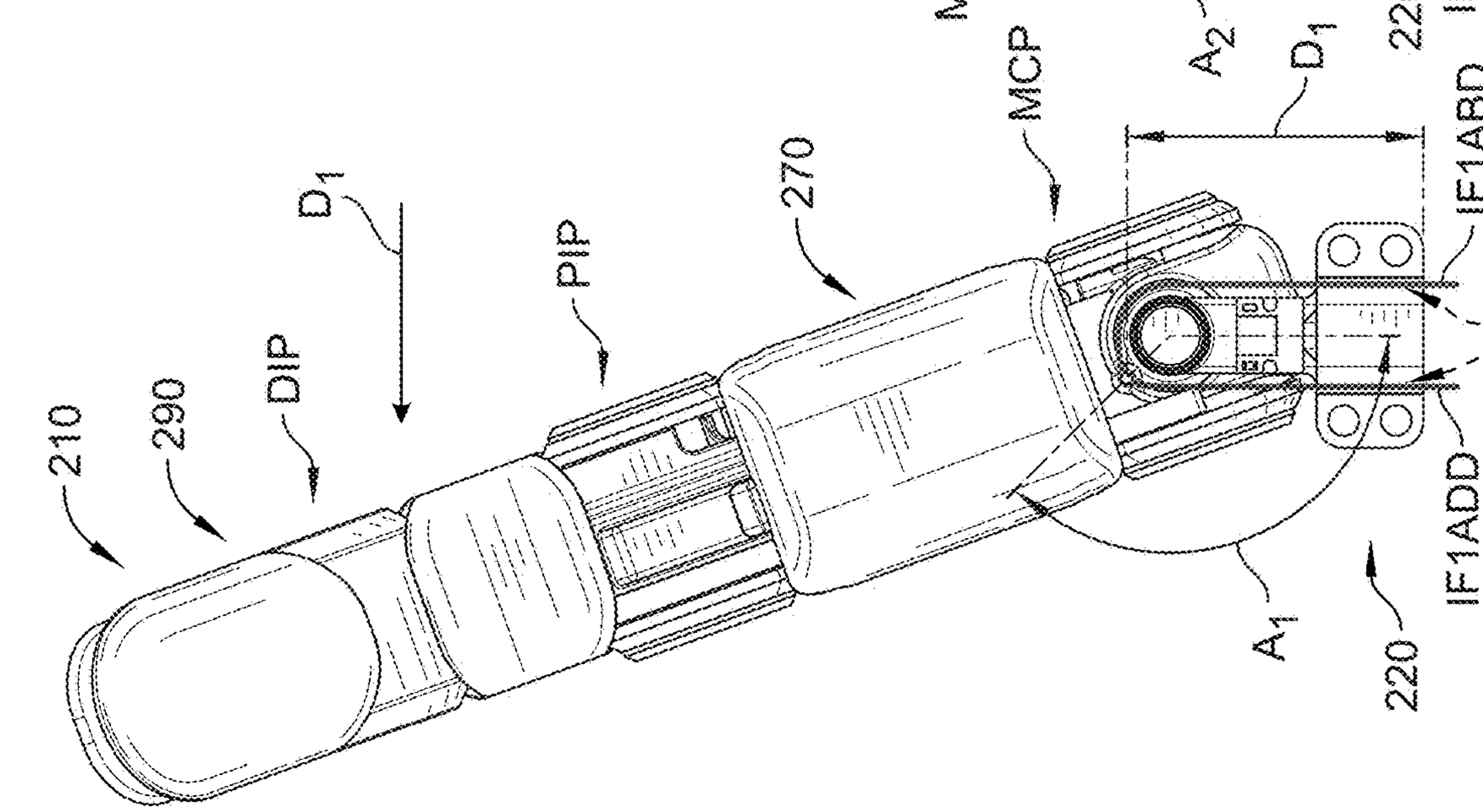

FIG. 50

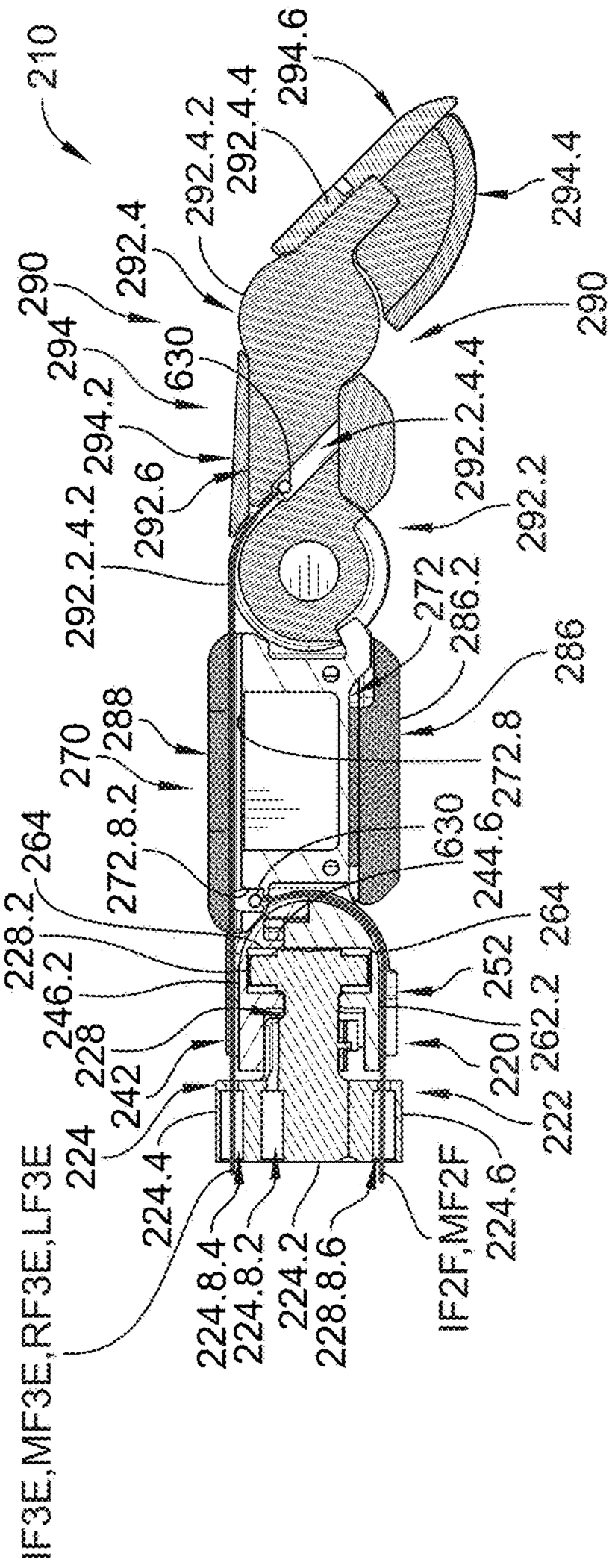
210
292.4.2
292.4.4
294.6
292.4
294.4
290
294
630
294.2
292.6
292.2.4.4
292.2.4.2
292.2
272
286.2
286
270
288
272.8
272.8.2
264
228.2
246.2
228
242
224
224.4
224.8.4
224.8.2
224.2
228.8.6
IF3E,MF3E,RF3E,LF3E
IF2F,MF2F
224.6
222
220
262.2
252
244.6

FIG. 54

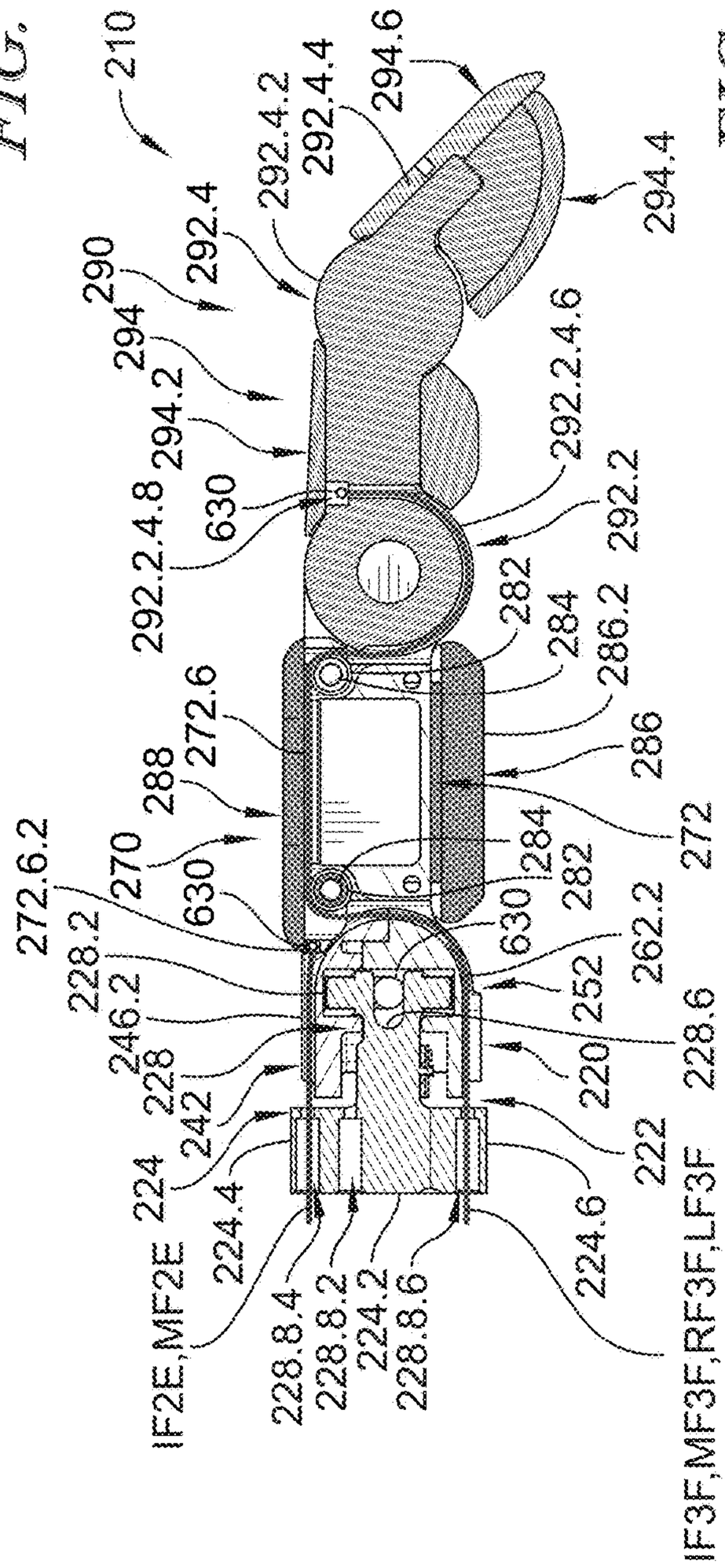
210
292.4.2
292.4.4
294.6
294.4
290
292.4
294
294.2
292.2.4.6
292.2.4.8
630
292.2
282
284
286.2
286
272.6
272
288
270
272.6.2
228.2
246.2
228
242
224
224.4
224.8.4
228.8.2
224.2
228.8.6
IF2E,MF2E
224.6
IF3F,MF3F,RF3F,LF3F
222
220
228.6
262.2
252

FIG. 55

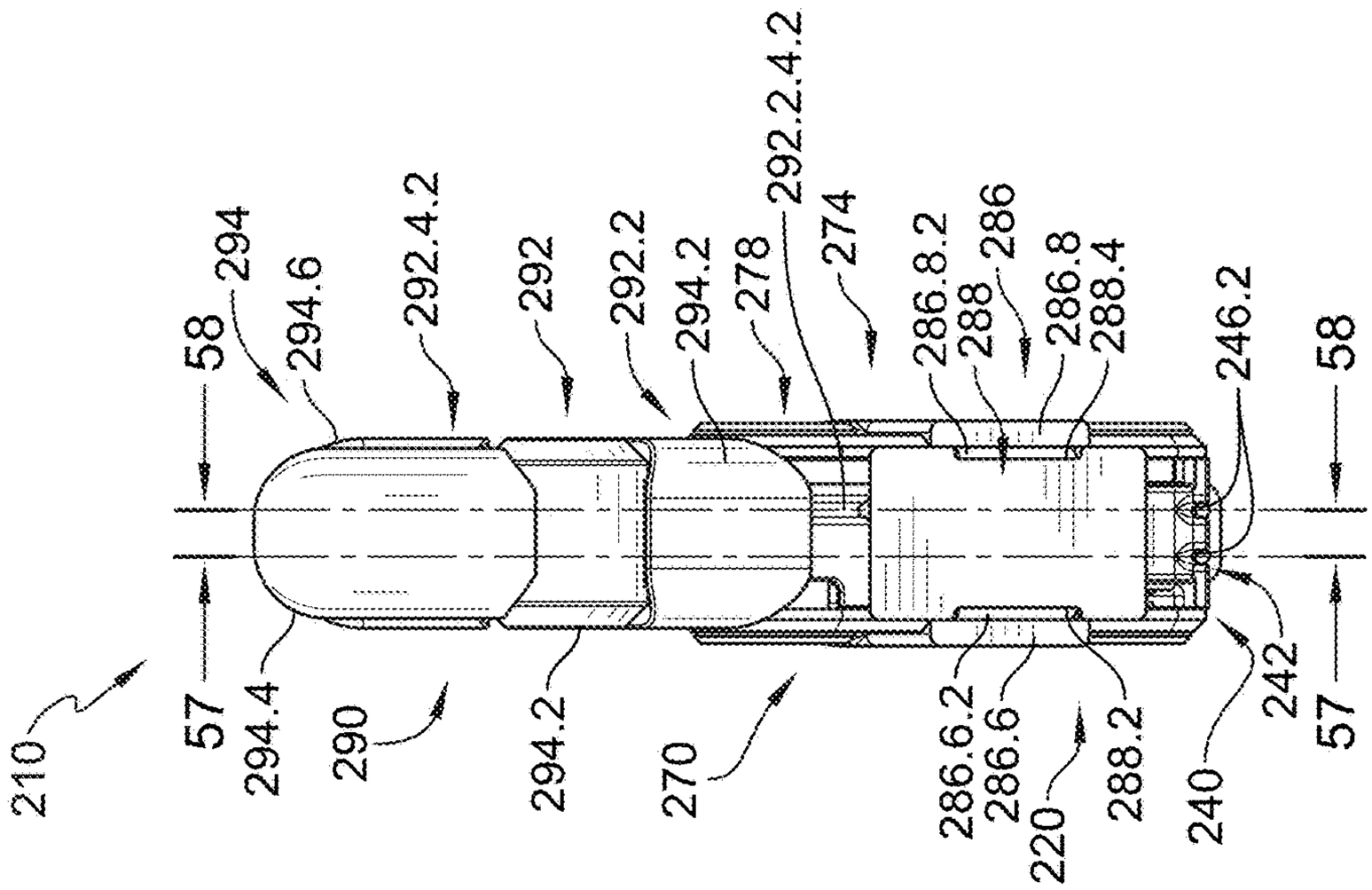
210
57
294.4
290
294.2
270
286.6.2
286.6
220
288.2
240
242
57
246.2
58
58
294
294.6
292.4.2
292
292.2
294.2
278
292.2.4.2
274
286.8.2
288
286
286.8
288.4

FIG. 56

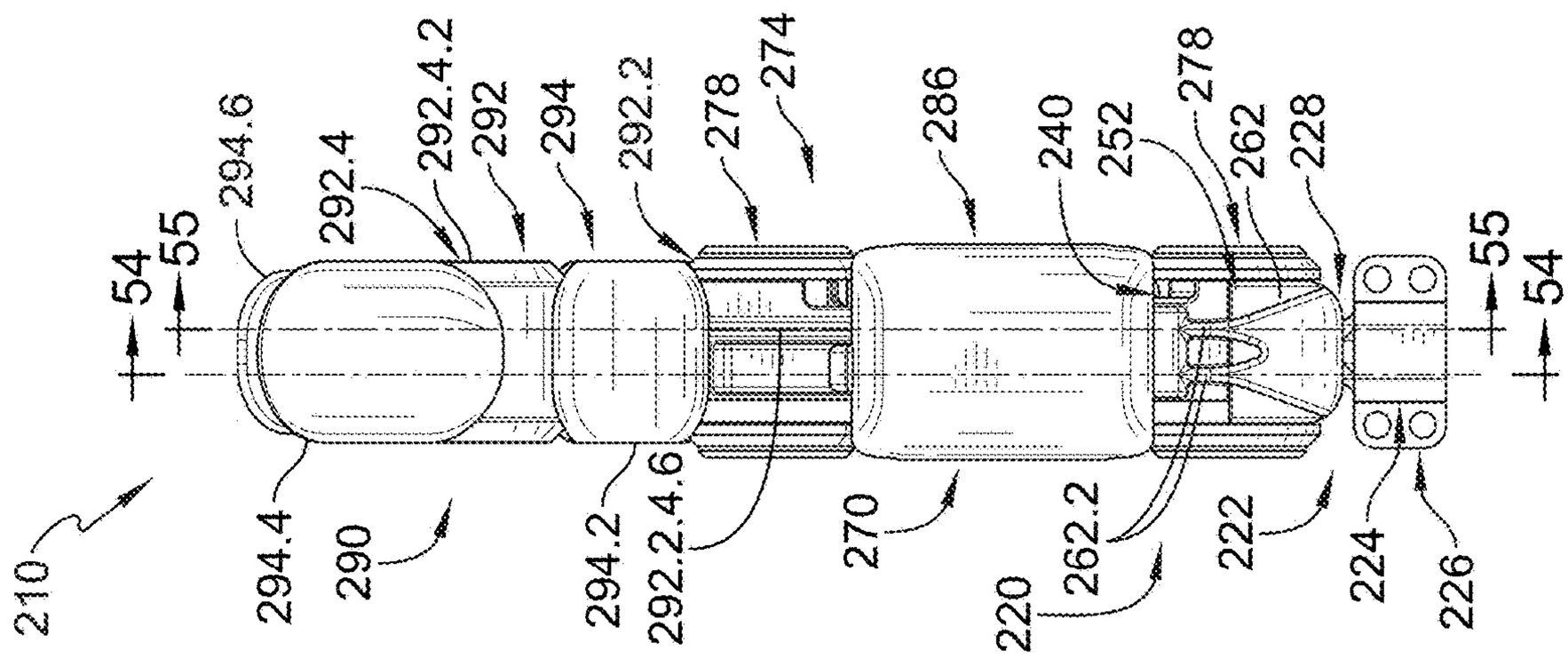
210
294.4
290
294.2
292.2.4.6
270
220
262.2
222
224
226
54
55
294.6
292.4
292.4.2
292
294
292.2
278
274
286
240
252
278
262
228
55
54

FIG. 53

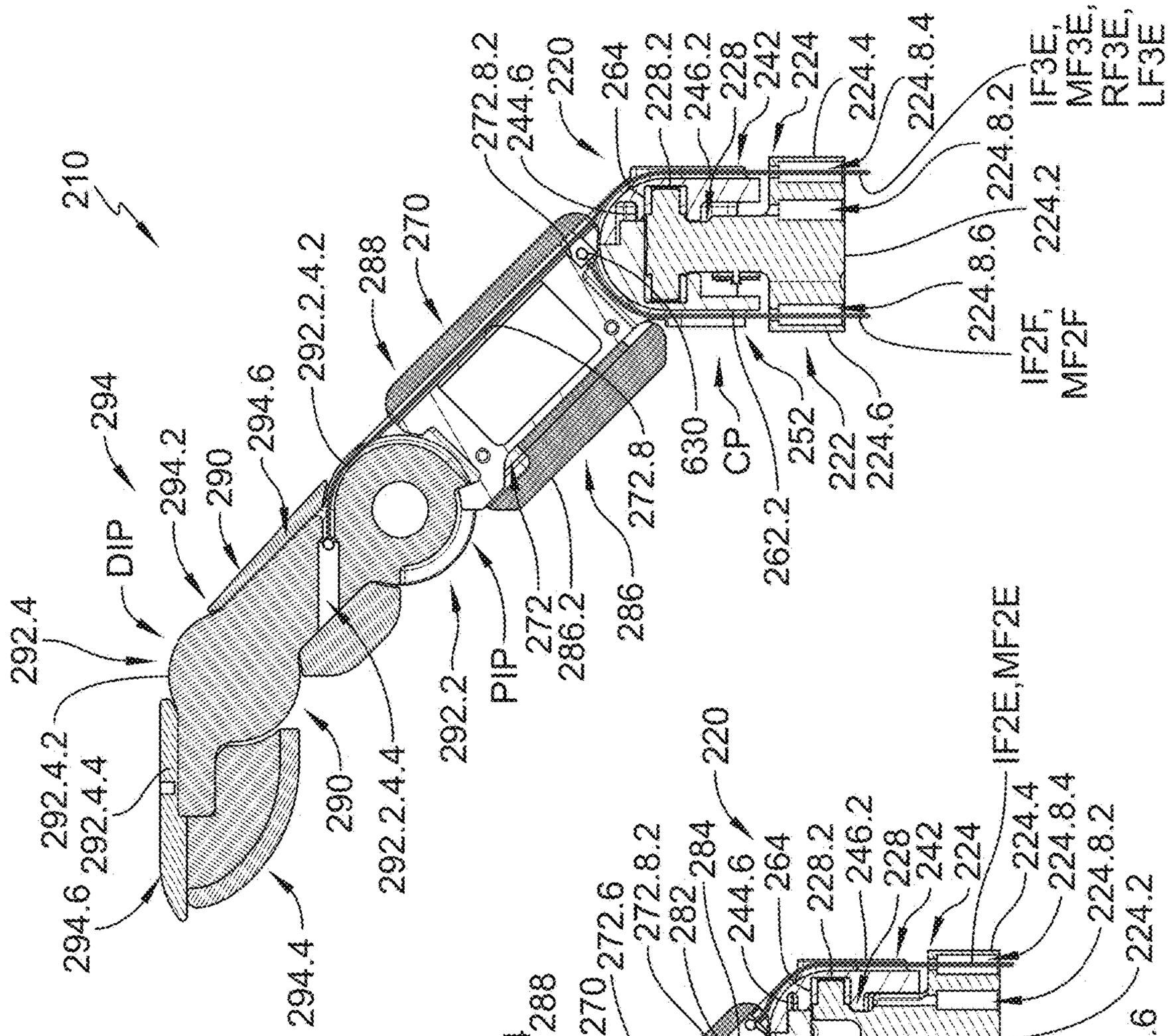
210
294
294.2
290
294.6
292.2.4.2
288
270
DIP
292.4
292.4.2
292.4.4
294.6
294.4
290
292.2.4.4
292.2
PIP
272
286.2
286
272.8
630
CP
262.2
252
222
224.6
272.8.2
244.6
220
264
228.2
246.2
228
242
224
224.4
224.8.4
224.8.2
224.2
224.8.6
IF3E, MF3E, RF3E, LF3E
IF2F, MF2F

FIG. 58

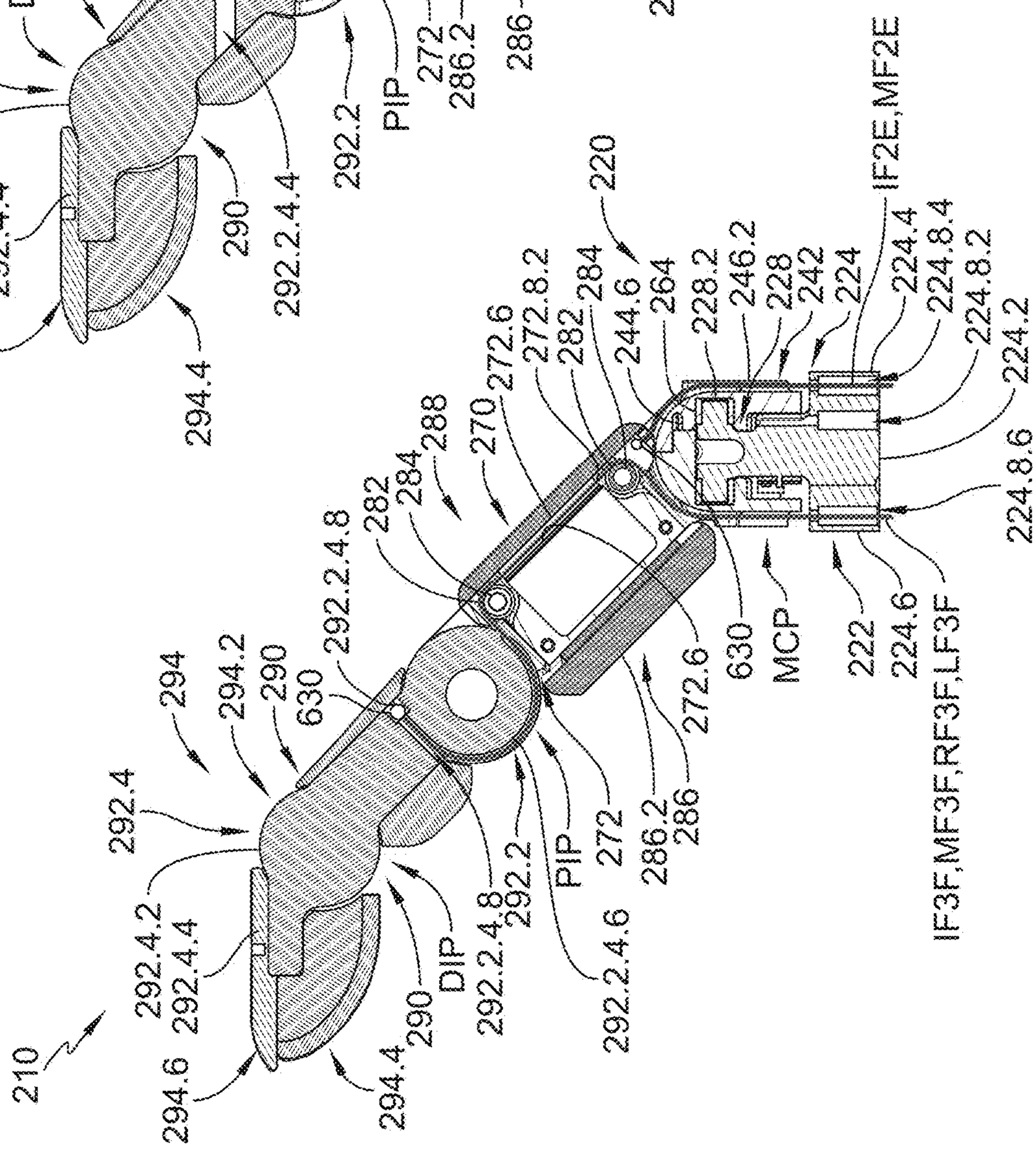
210
294
294.2
290
630
292.2.4.8
282
284
288
270
272.6
292.4
292.4.2
292.4.4
294.6
294.4
290
DIP
292.2.4.8
292.2
PIP
292.2.4.6
272
286.2
286
272.6
630
MCP
222
224.6
IF3F,MF3F,RF3F,LF3F
220
IF2E,MF2E
224.4
224.8.4
224.8.2
224.2
224.8.6

FIG. 57

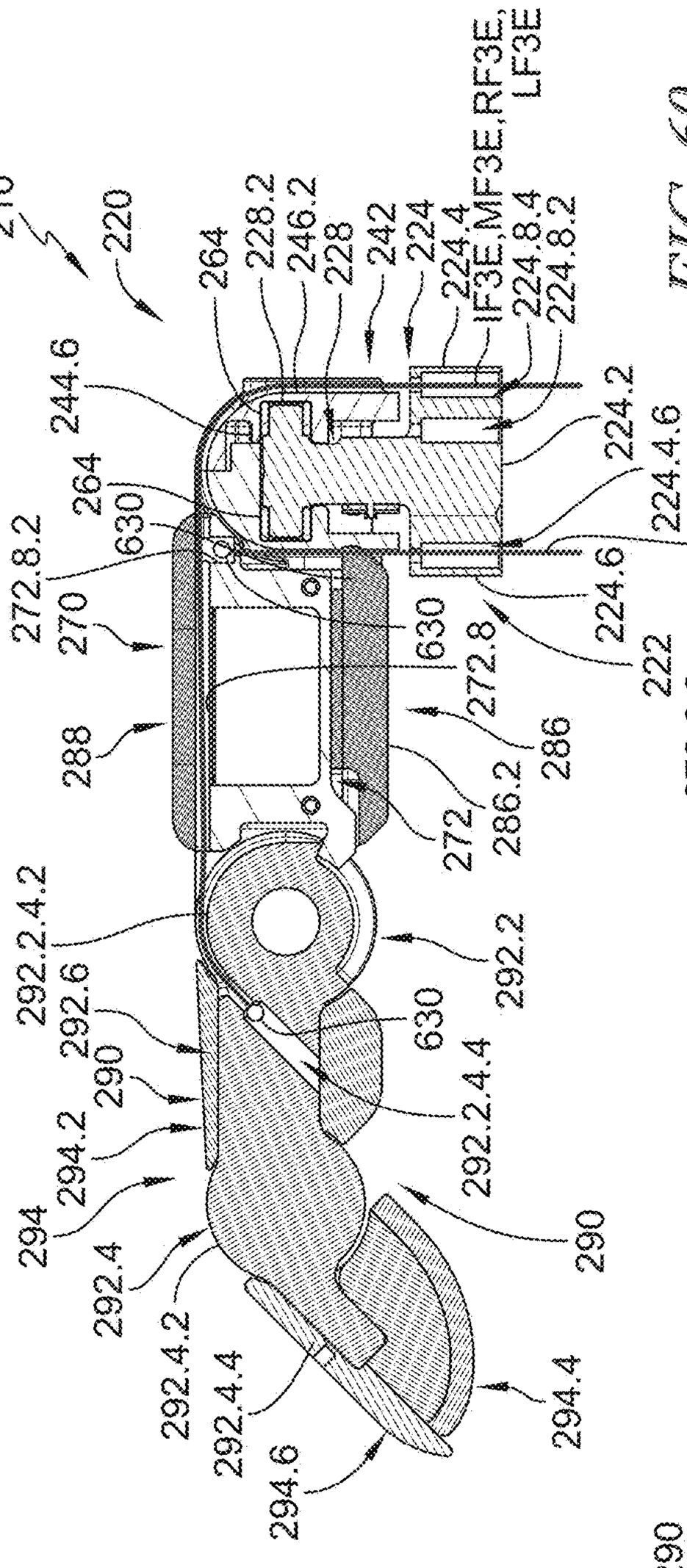
210
220
264
228.2
246.2
228
242
224
224.4
IF3E,MF3E,RF3E,
LF3E
224.8.4
224.8.2
244.6
224.2
264
224.4.6
630
IF2F,MF2F
272.8.2
224.6
270
630
222
272.8
288
286
272
286.2
292.2.4.2
292.2
292.6
630
290
292.2.4.4
294.2
294
292.4
290
292.4.2
292.4.4
294.4
294.6

FIG. 60

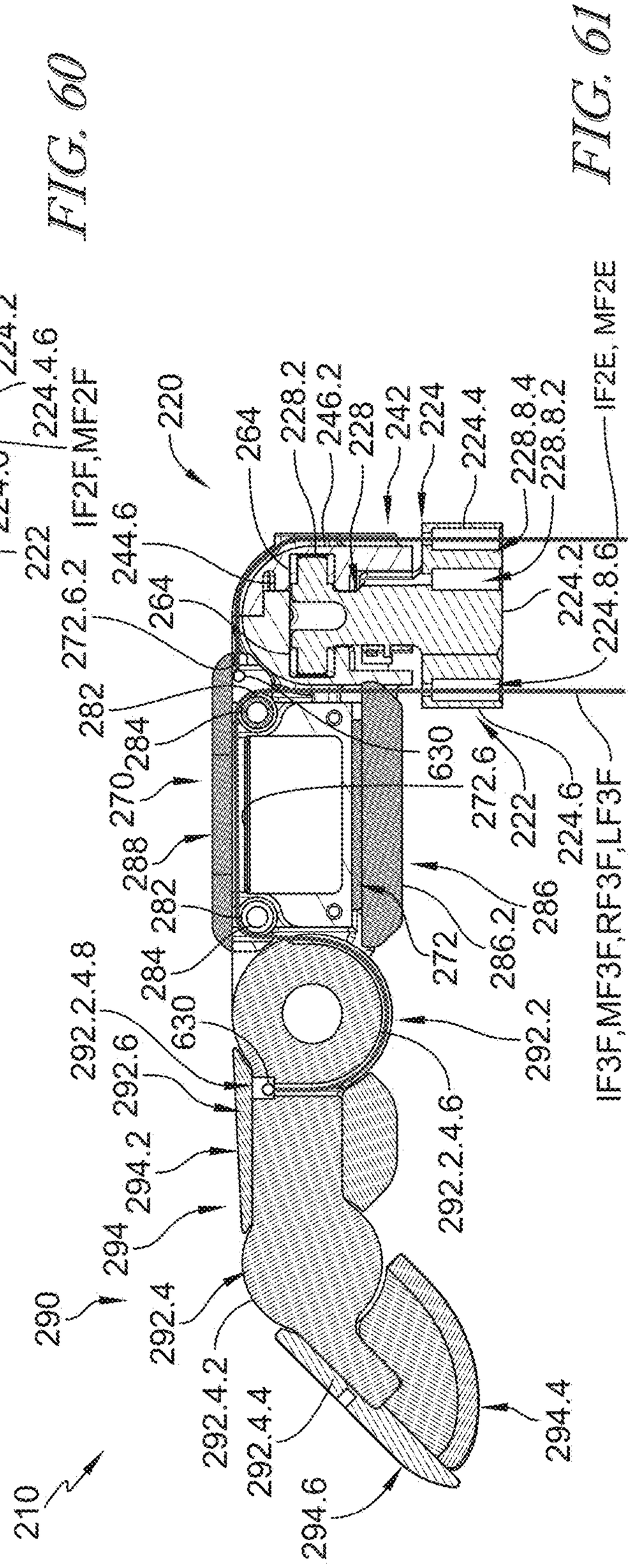
220
264
228.2
246.2
228
242
224
224.4
228.8.4
228.8.2
IF2E, MF2E
244.6
224.2
224.8.6
264
272.6.2
282
284
630
270
272.6
222
224.6
IF3F,MF3F,RF3F,LF3F
288
282
286
272
286.2
284
292.2.4.8
630
292.2
292.6
292.2.4.6
294.2
294
290
292.4
292.4.2
292.4.4
294.4
210
294.6

FIG. 61

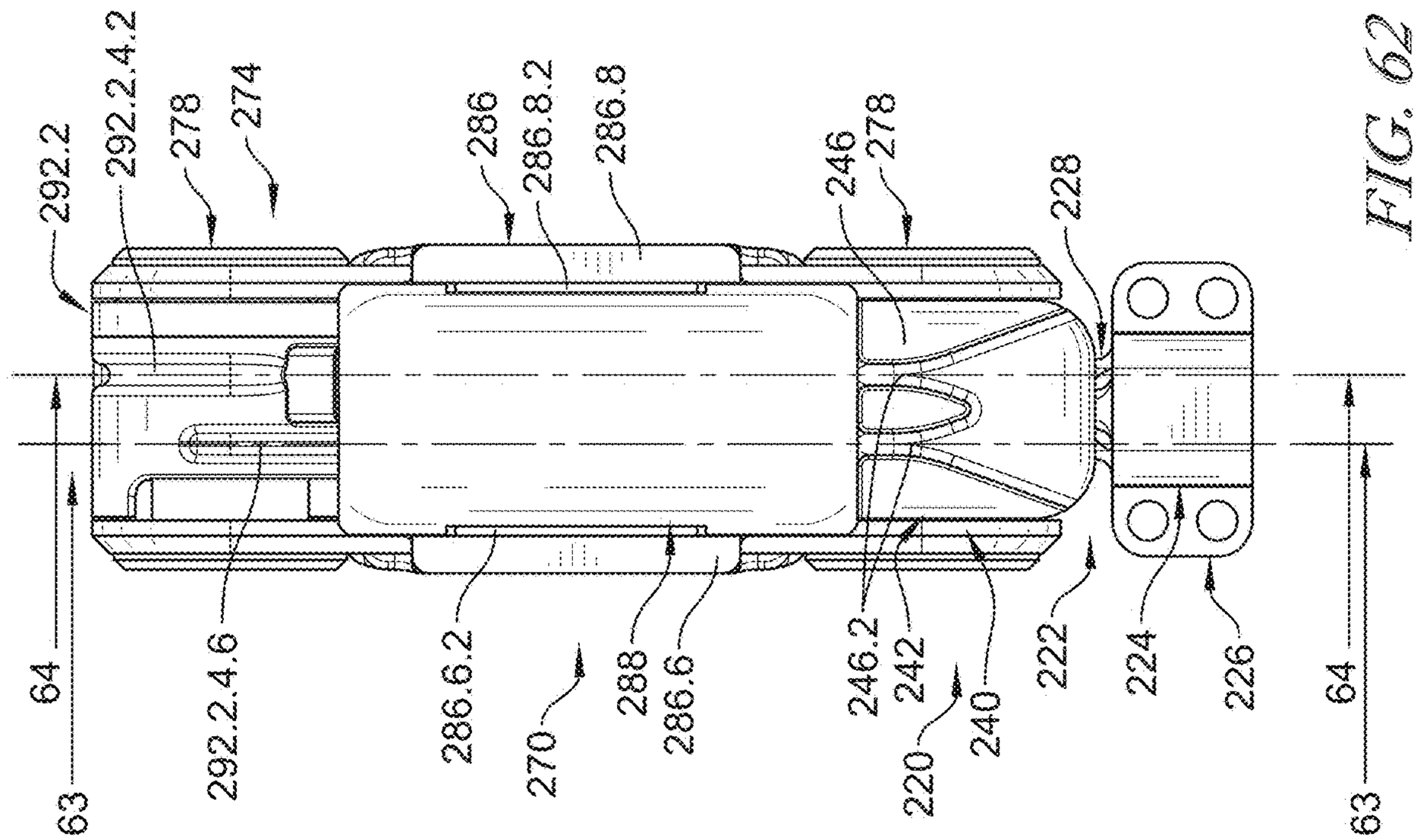
292.2
292.2.4.2
278
274
286
286.8.2
286.8
246
278
228
64
63
292.2.4.6
286.6.2
270
288
286.6
246.2
242
220
240
222
224
226
64
63

FIG. 62

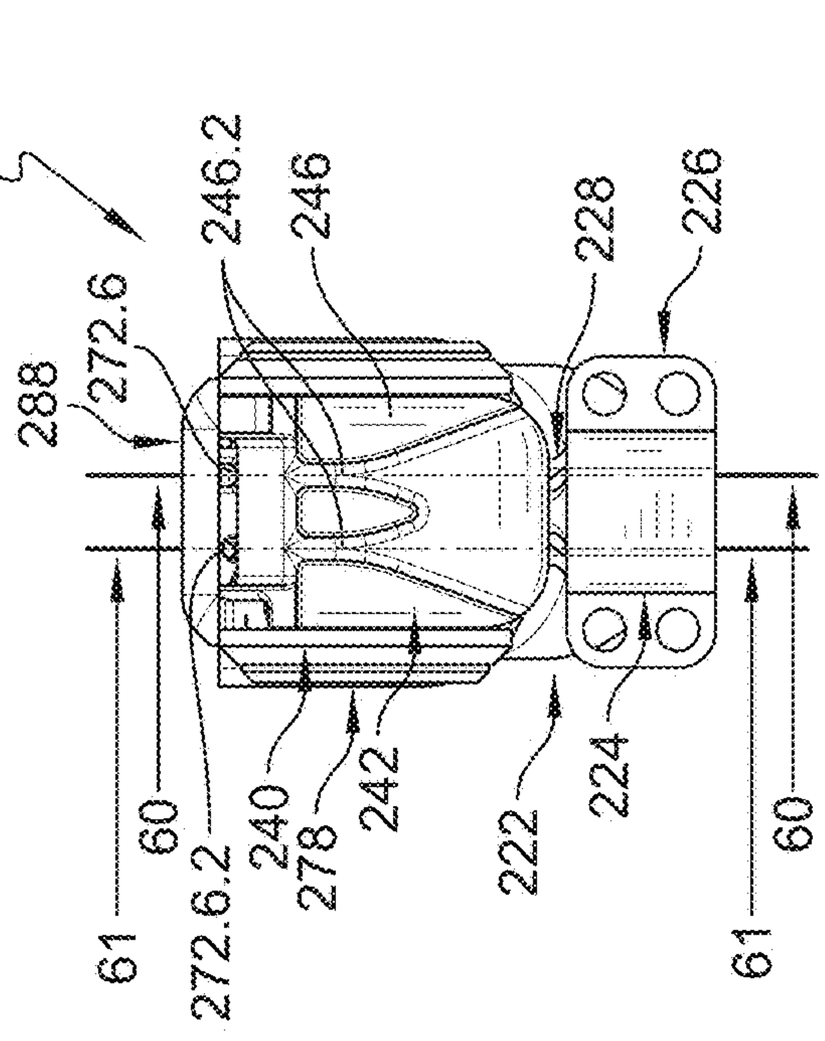
210
246.2
246
228
226
288
272.6
61
60
272.6.2
240
278
242
222
224
61
60

FIG. 59

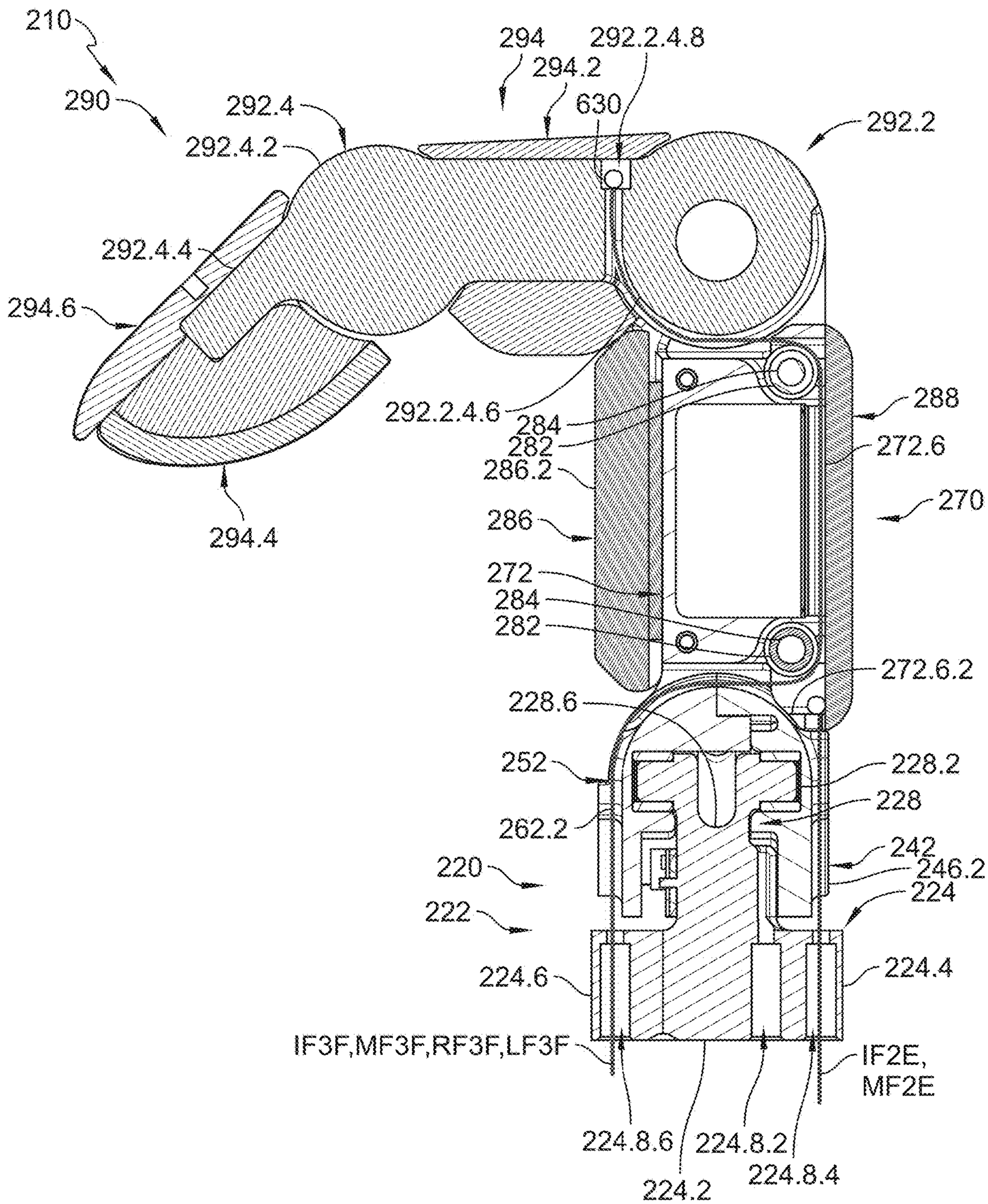
210
290
294
292.2.4.8
294.2
630
292.4
292.2
292.4.2
292.4.4
294.6
292.2.4.6
284
282
288
272.6
286.2
270
286
294.4
272
284
282
272.6.2
228.6
252
228.2
228
262.2
242
220
246.2
224
222
224.6
224.4
IF3F,MF3F,RF3F,LF3F
IF2E,
MF2E
224.8.6
224.8.2
224.2
224.8.4

FIG. 63

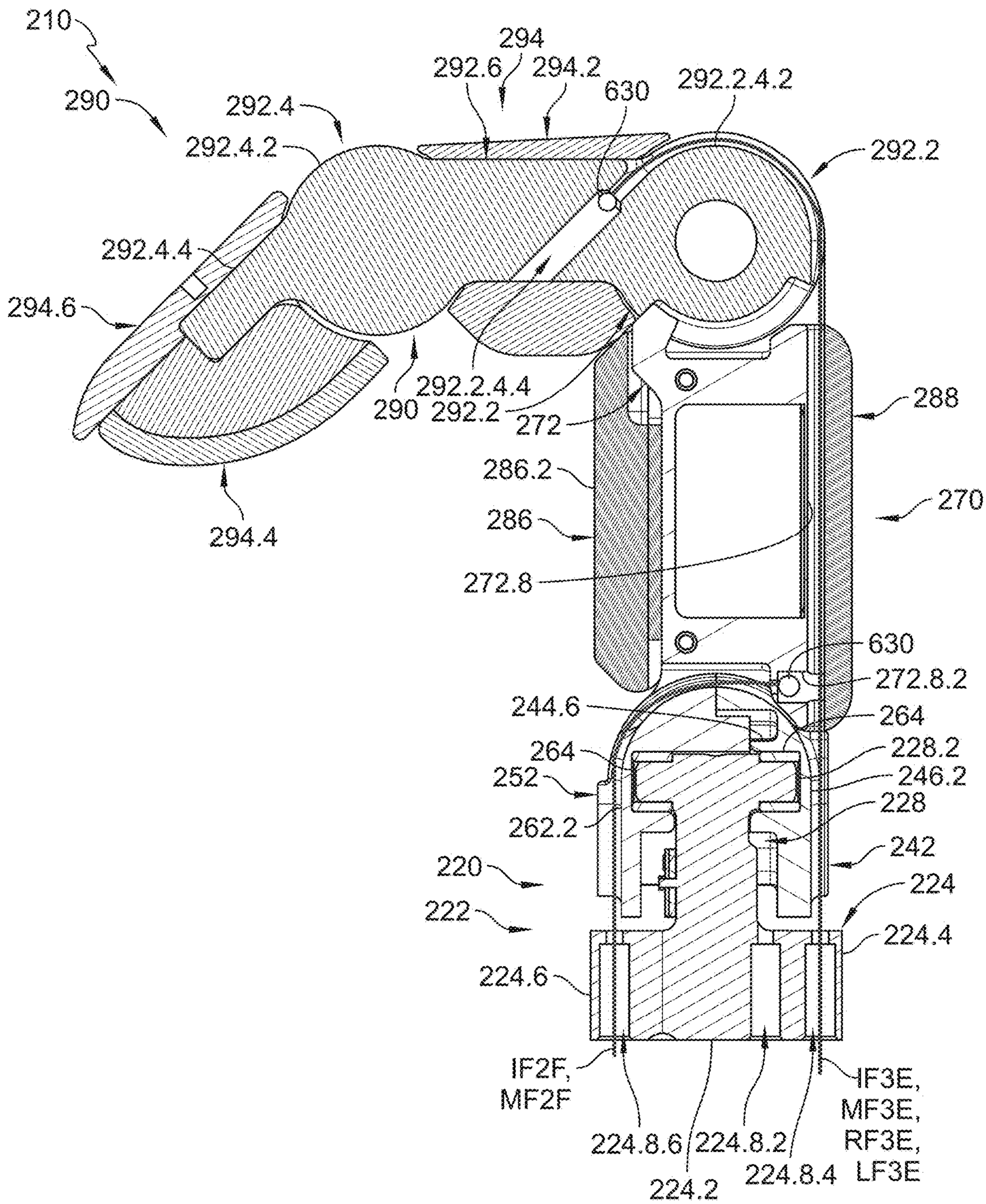
210
290
292.4
292.4.2
292.6
294
294.2
630
292.2.4.2
292.2
292.4.4
294.6
290
292.2.4.4
292.2
272
288
286.2
286
270
294.4
272.8
630
272.8.2
244.6
264
264
228.2
252
246.2
262.2
228
242
220
224
222
224.4
224.6
IF2F,
MF2F
IF3E,
MF3E,
RF3E,
LF3E
224.8.6
224.8.2
224.2
224.8.4

FIG. 64

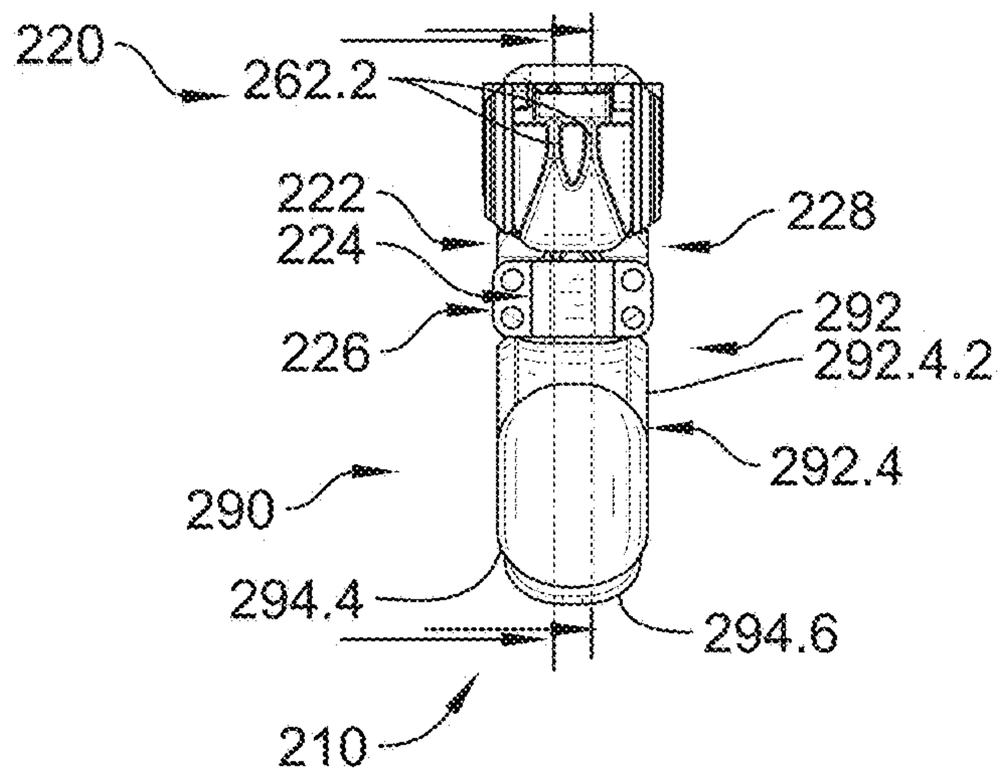

FIG. 65

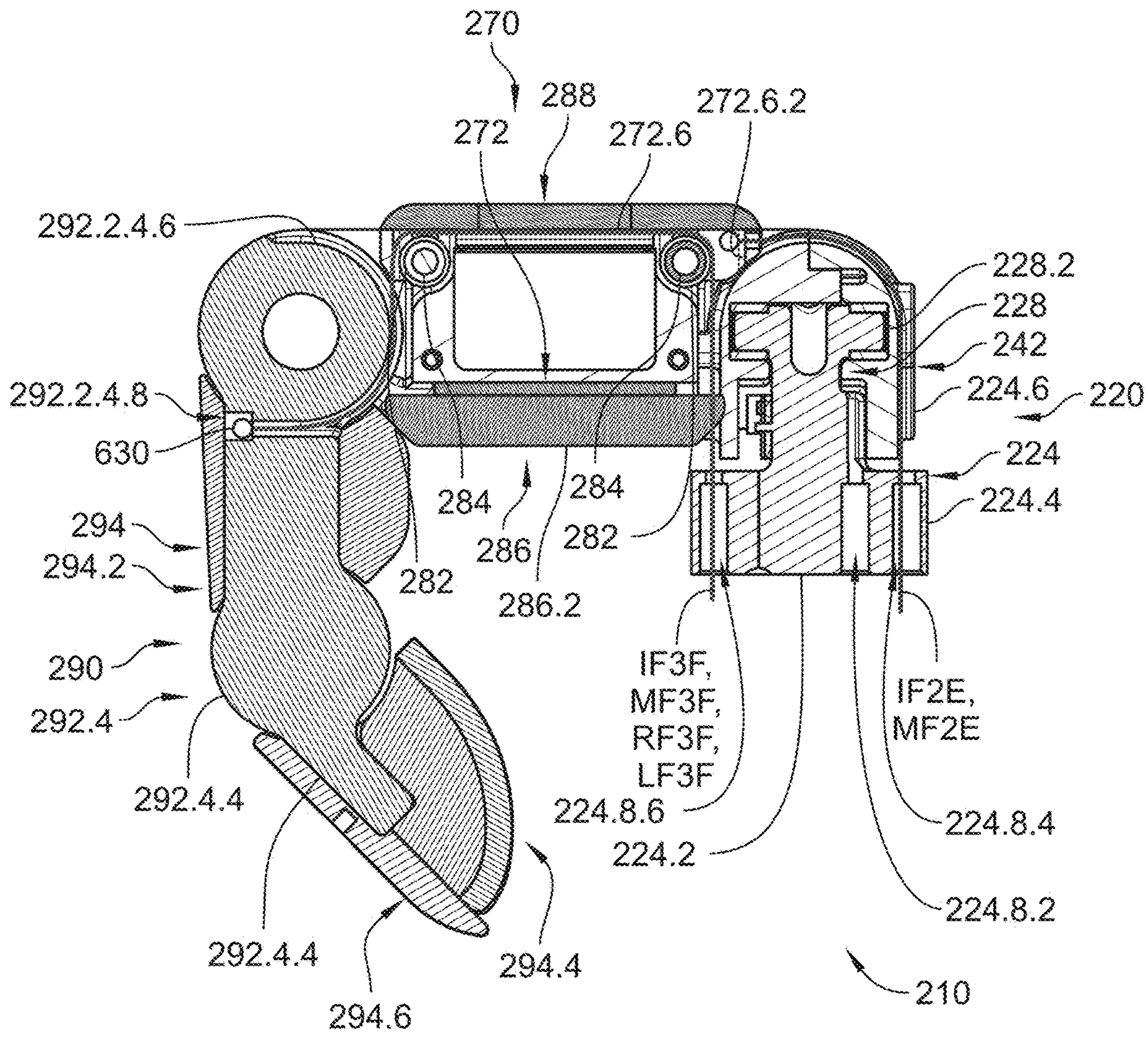

FIG. 66A

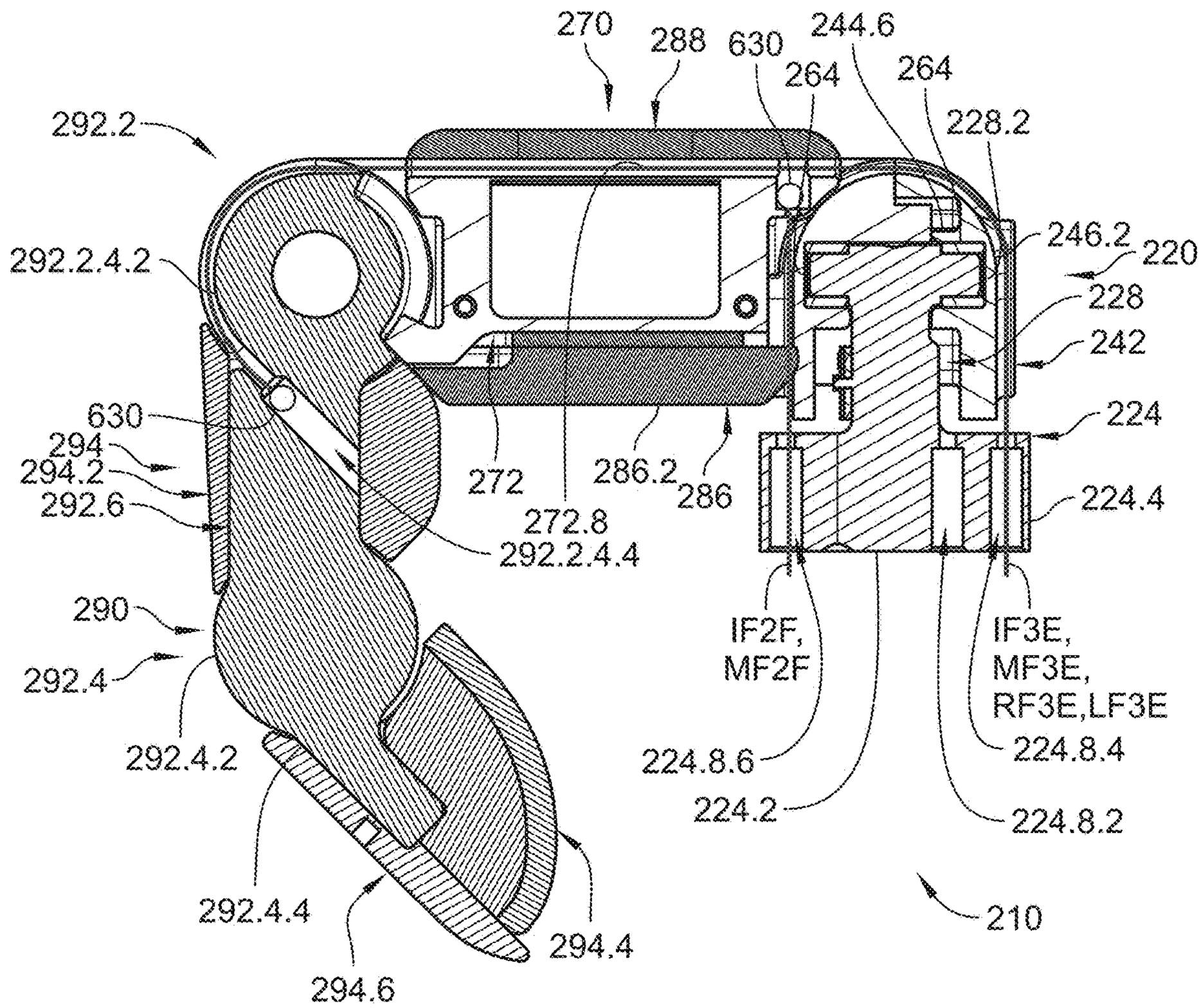
270
288
630
244.6
264
264
228.2
292.2
292.2.4.2
246.2
220
228
242
224
630
294
294.2
292.6
272
286.2
286
272.8
292.2.4.4
224.4
290
292.4
292.4.2
IF2F,
MF2F
IF3E,
MF3E,
RF3E,LF3E
224.8.4
224.8.6
224.2
224.8.2
292.4.4
294.4
294.6
210

FIG. 66B

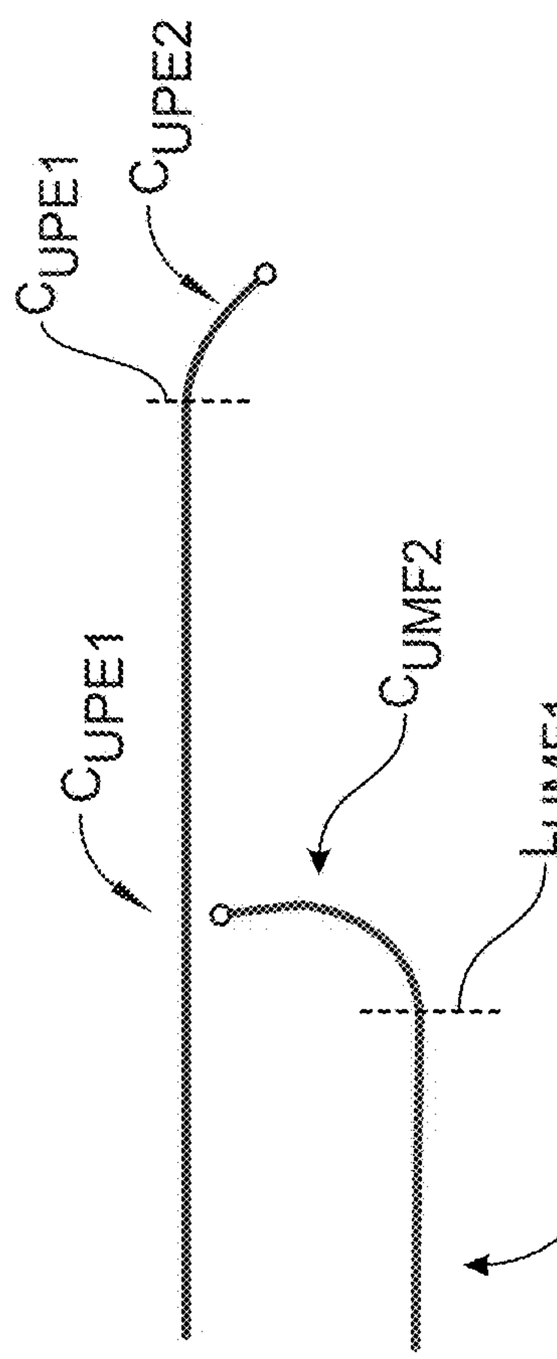

FIG. 67A

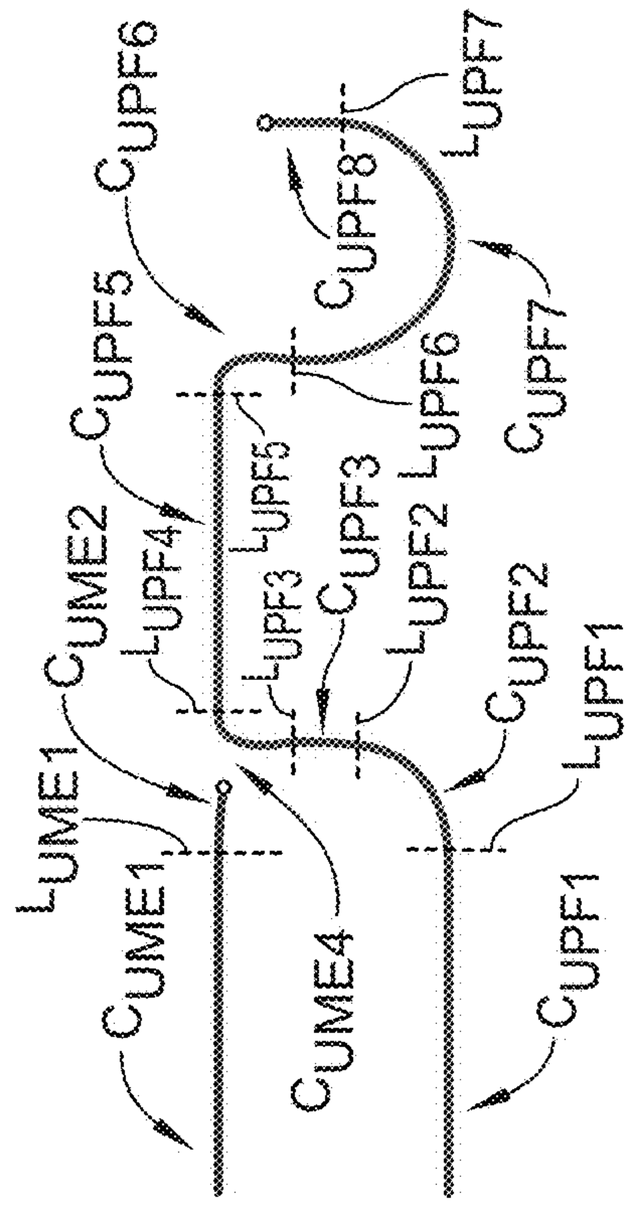

FIG. 67B

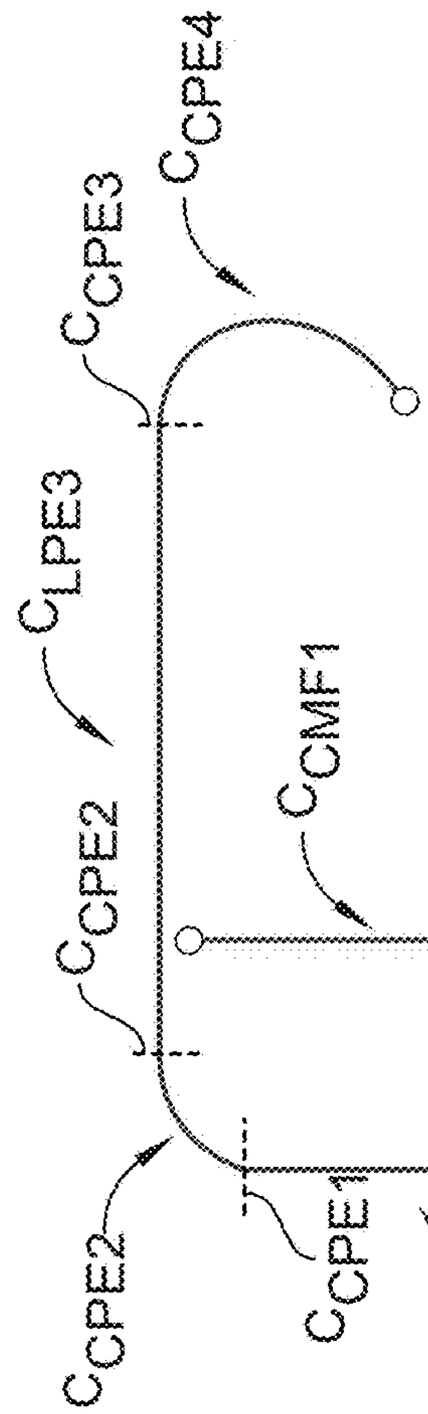

FIG. 67C

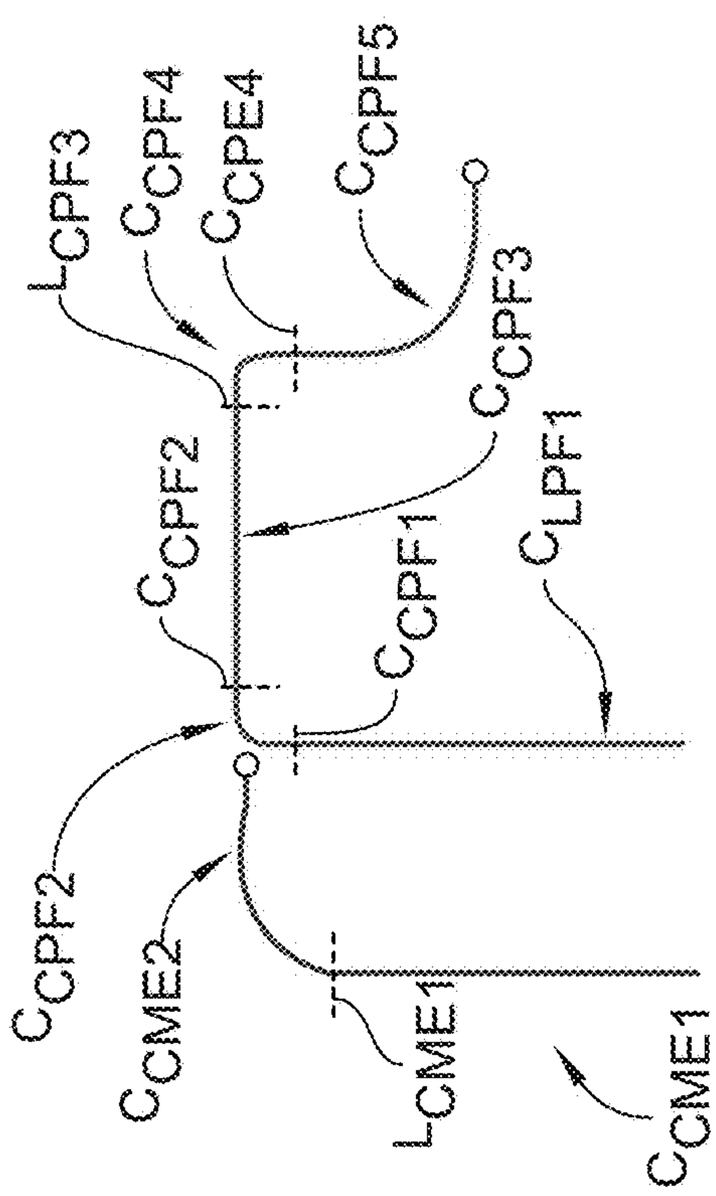

FIG. 67D

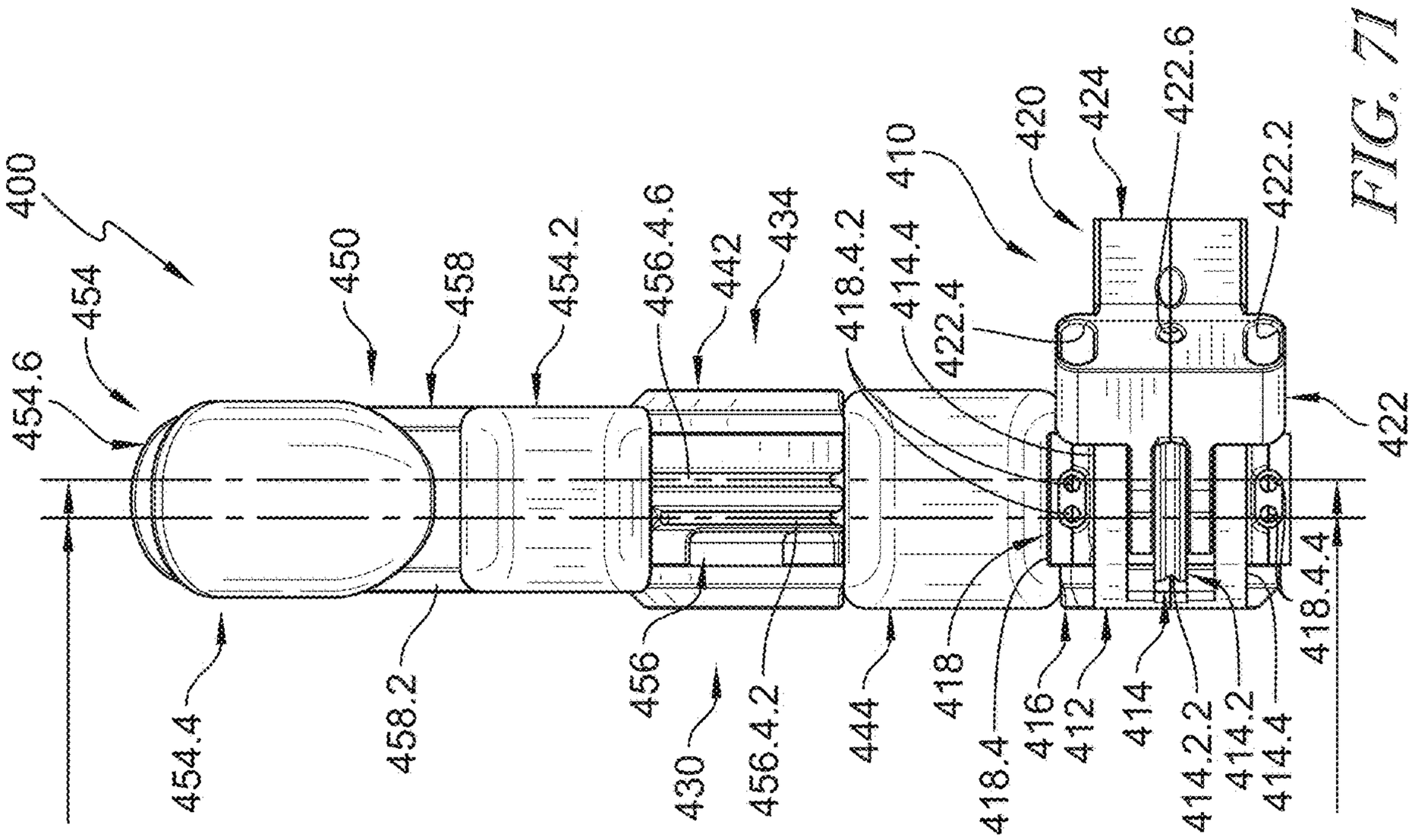
400
454
454.6
450
458
454.2
456.4.6
442
434
418.4.2
414.4
410
422.4
420
424
422.6
422.2
422
418.4.4
454.4
458.2
456
430
456.4.2
444
418
418.4
416
412
414
414.2.2
414.2
414.4

FIG. 71

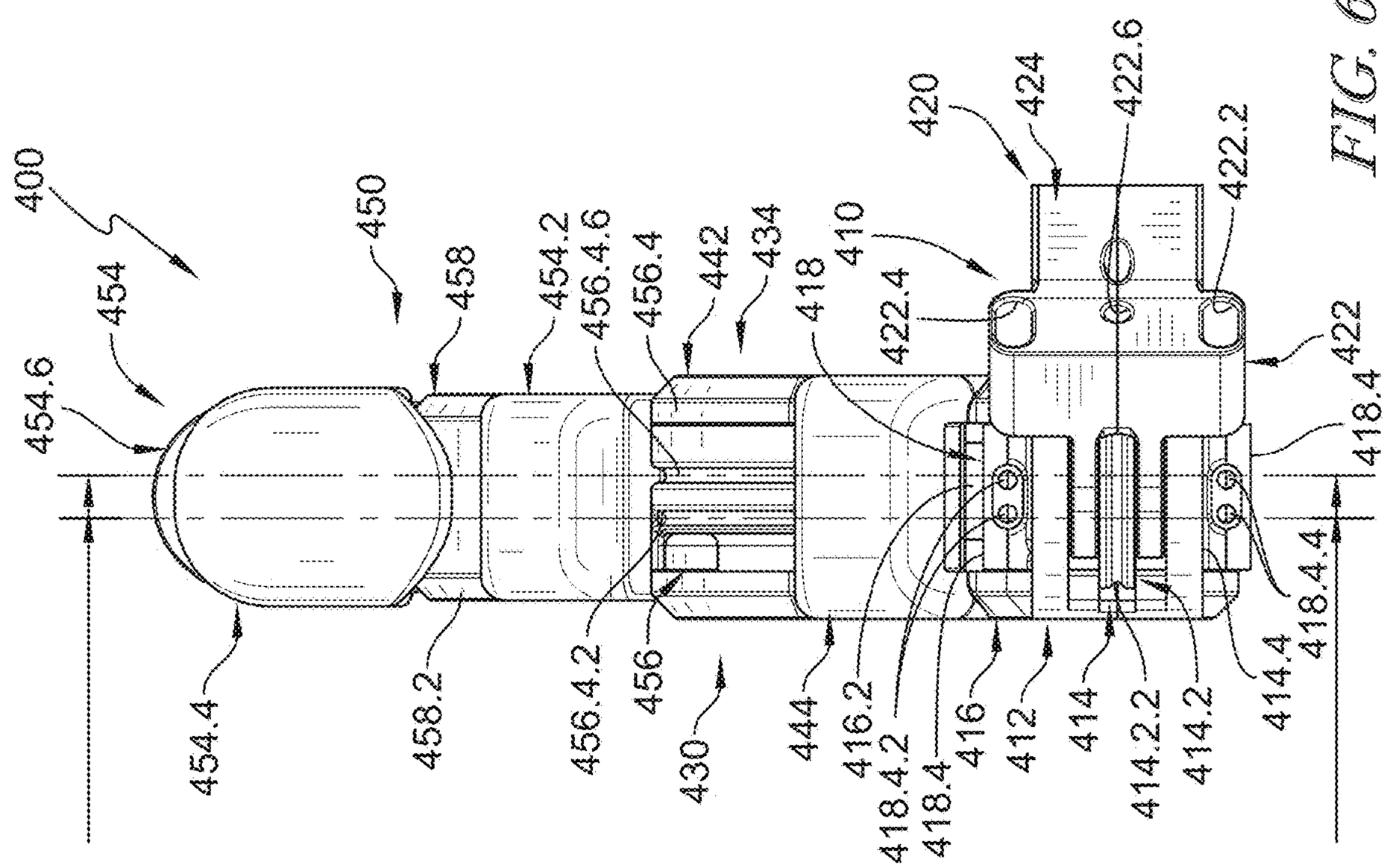
400
454
454.6
450
458
454.2
456.4.6
456.4
442
434
418
410
422.4
420
424
422.6
422.2
422
418.4
418.4.4
454.4
458.2
456.4.2
456
430
444
416.2
418.4.2
418.4
416
412
414
414.2.2
414.2
414.4

FIG. 68

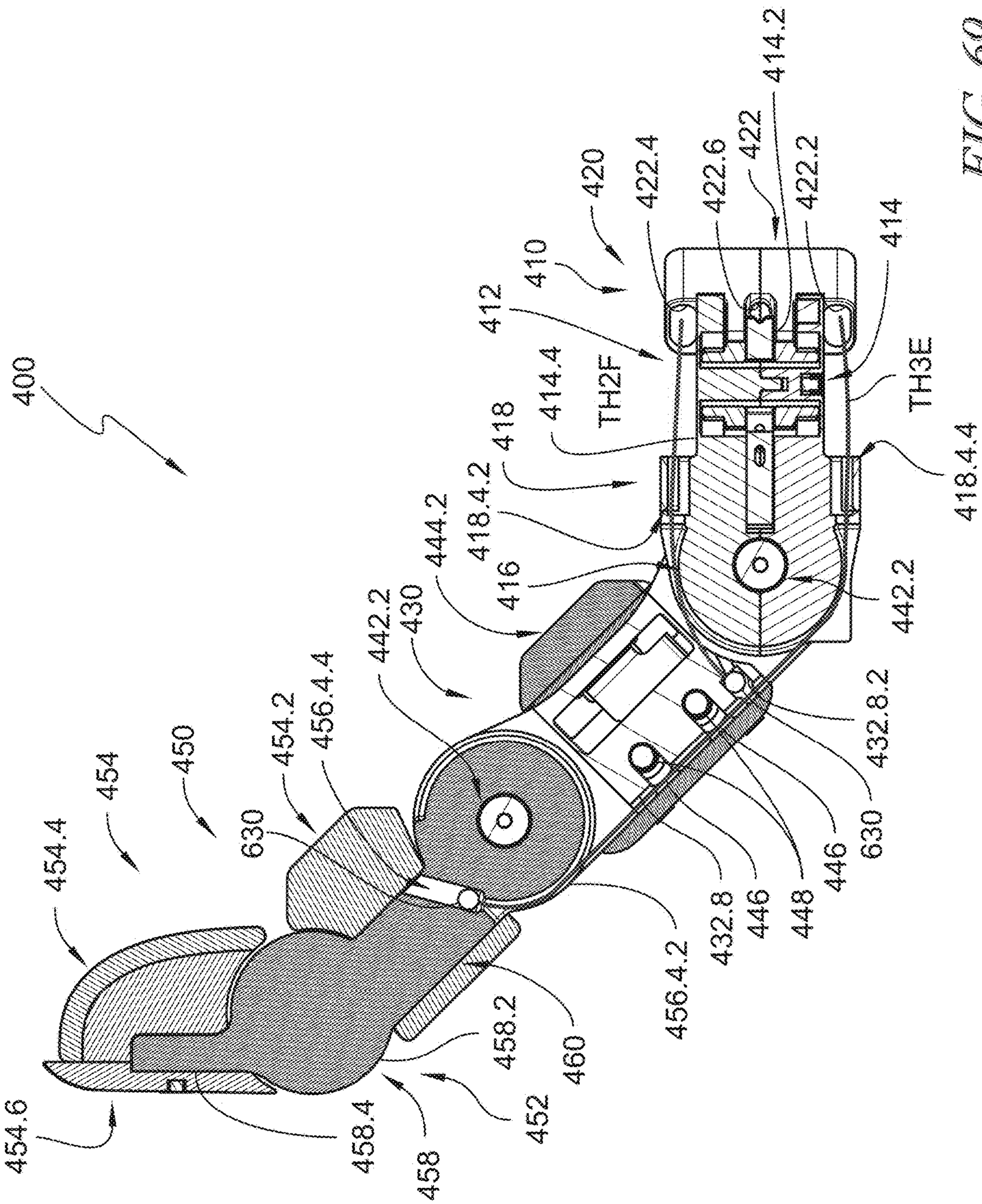
400
420
422.4
422.6
422
414.2
422.2
410
412
414
414.4
TH2F
TH3E
418
418.4.2
418.4.4
444.2
416
442.2
430
442.2
432.8.2
630
446
448
432.8
456.4.2
460
458.2
452
458
458.4
454.6
454.4
454
450
630
454.2
456.4.4

FIG. 69

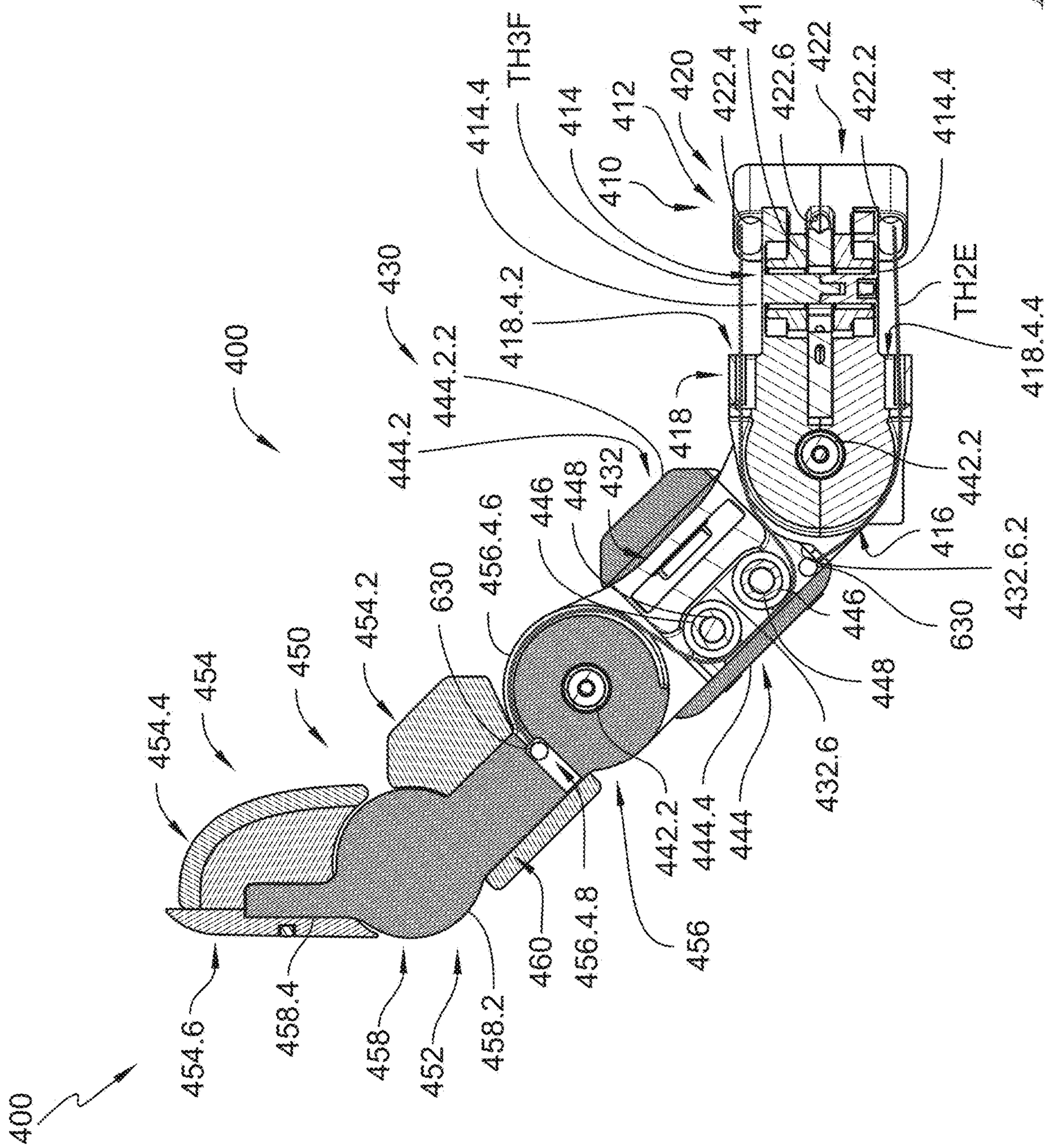
400
400
454.4
454
450
454.2
630
456.4.6
446
448
432
444.2
444.2.2
430
418.4.2
414.4
TH3F
414
412
420
422.4
422.6
422
422.2
414.4
410
TH2E
418.4.4
418
442.2
416
432.6.2
630
446
448
432.6
444
444.4
442.2
456
456.4.8
460
458.2
452
458
458.4
454.6

FIG. 70

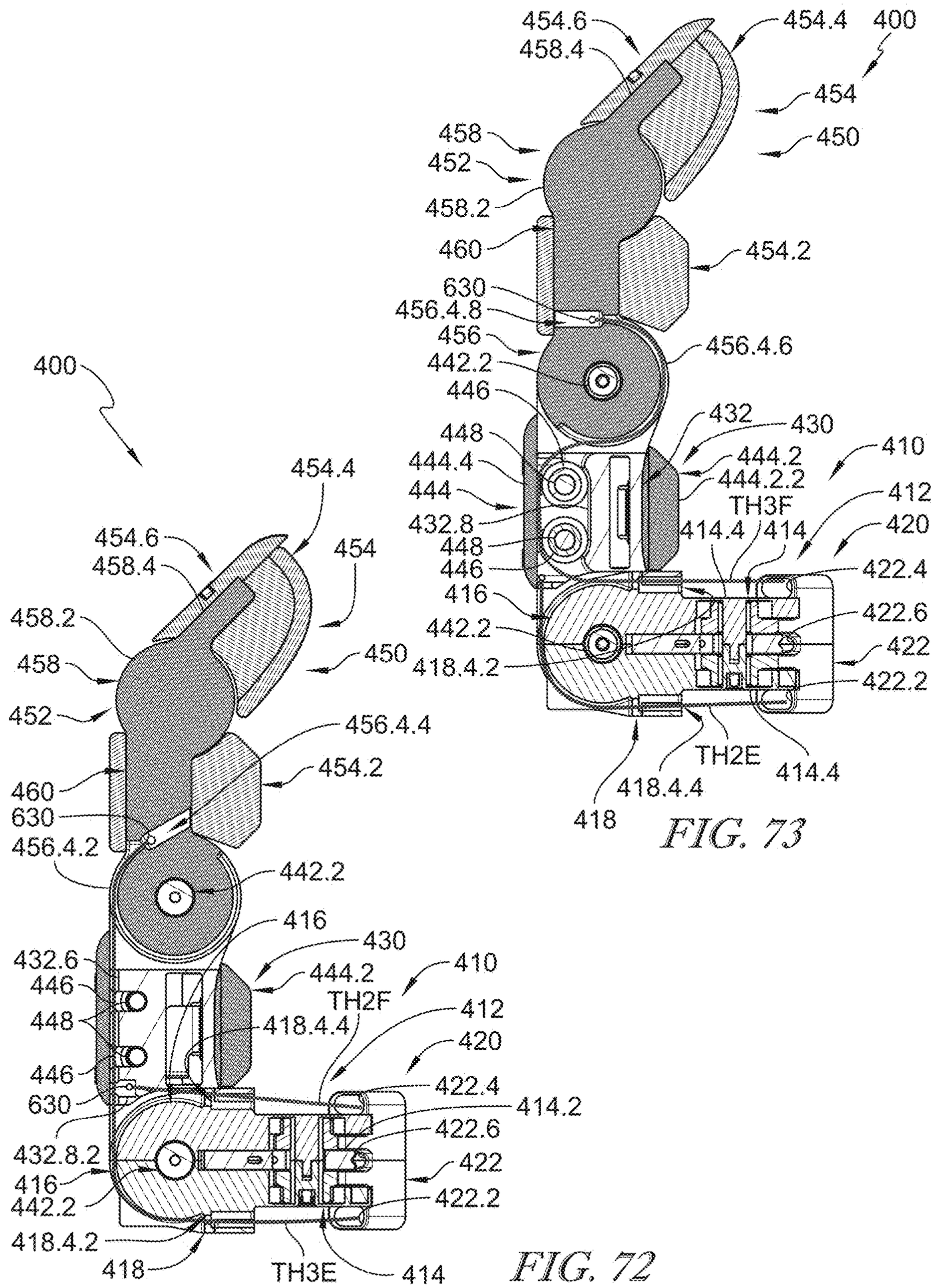
400
454.6
458.4
454.4
454
458
452
458.2
450
460
630
456.4.2
442.2
456.4.4
454.2
416
432.6
446
448
432.8.2
430
444.2
410
TH2F
412
420
422.4
414.2
422.6
422
422.2
418.4.2
418
TH3E
414
454.6
458.4
454.4
400
454
450
458
452
458.2
460
454.2
630
456.4.8
456
442.2
456.4.6
446
448
444.4
444
432.8
432
430
444.2
444.2.2
410
TH3F
412
414.4
414
420
422.4
416
442.2
422.6
418.4.2
422
422.2
TH2E
414.4
418.4.4
418

FIG. 72

FIG. 73

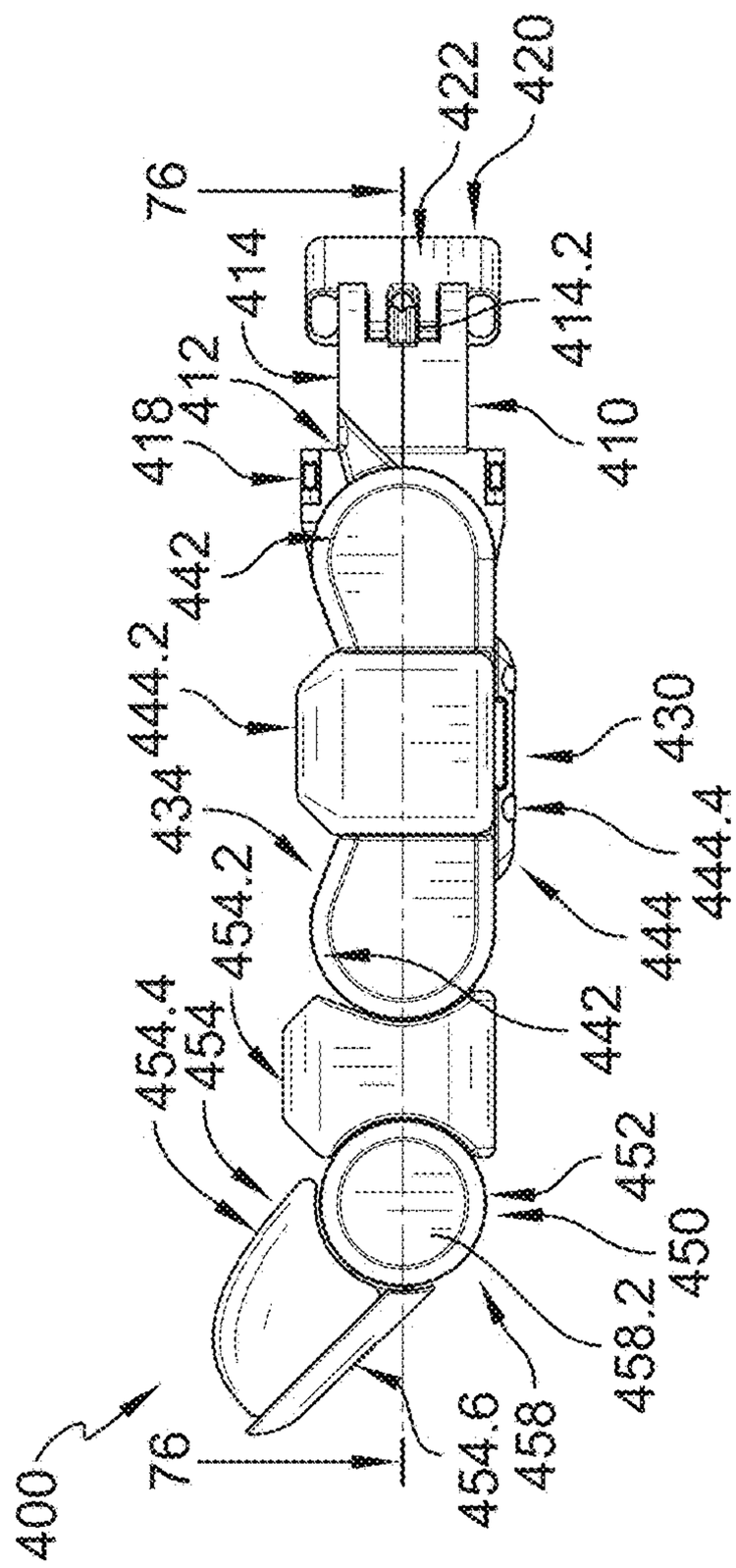
400
76
454.6
458
458.2
450
452
454.4
454
454.2
434
444.2
444
444.4
430
442
412
414
414.2
418
410
420
422

FIG. 74

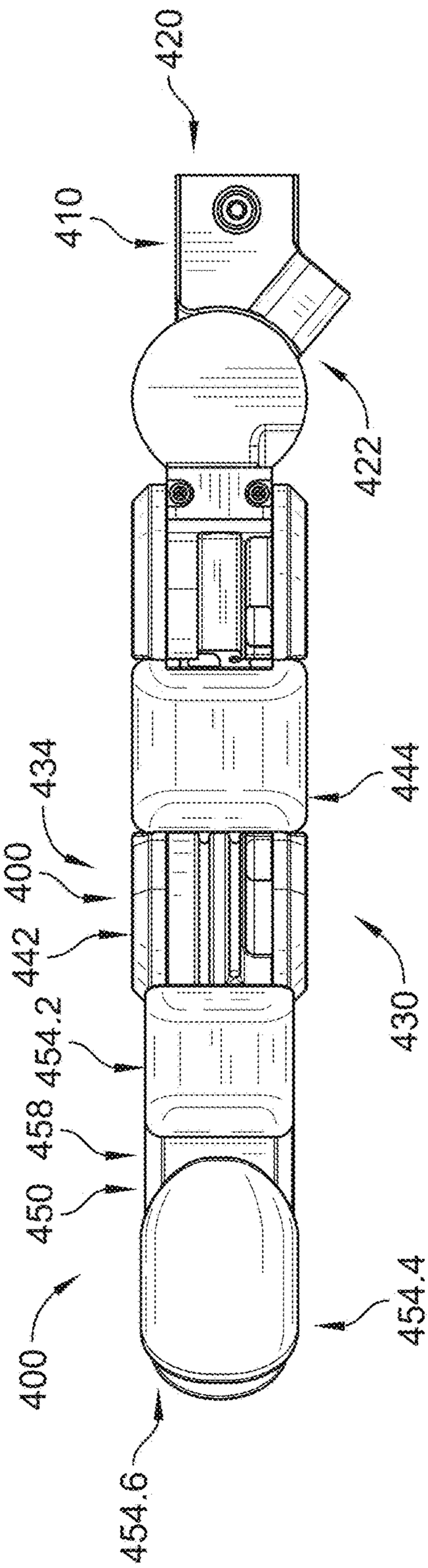
400
454.6
454.4
450
458
454.2
442
400
434
444
430
410
420
422

FIG. 81

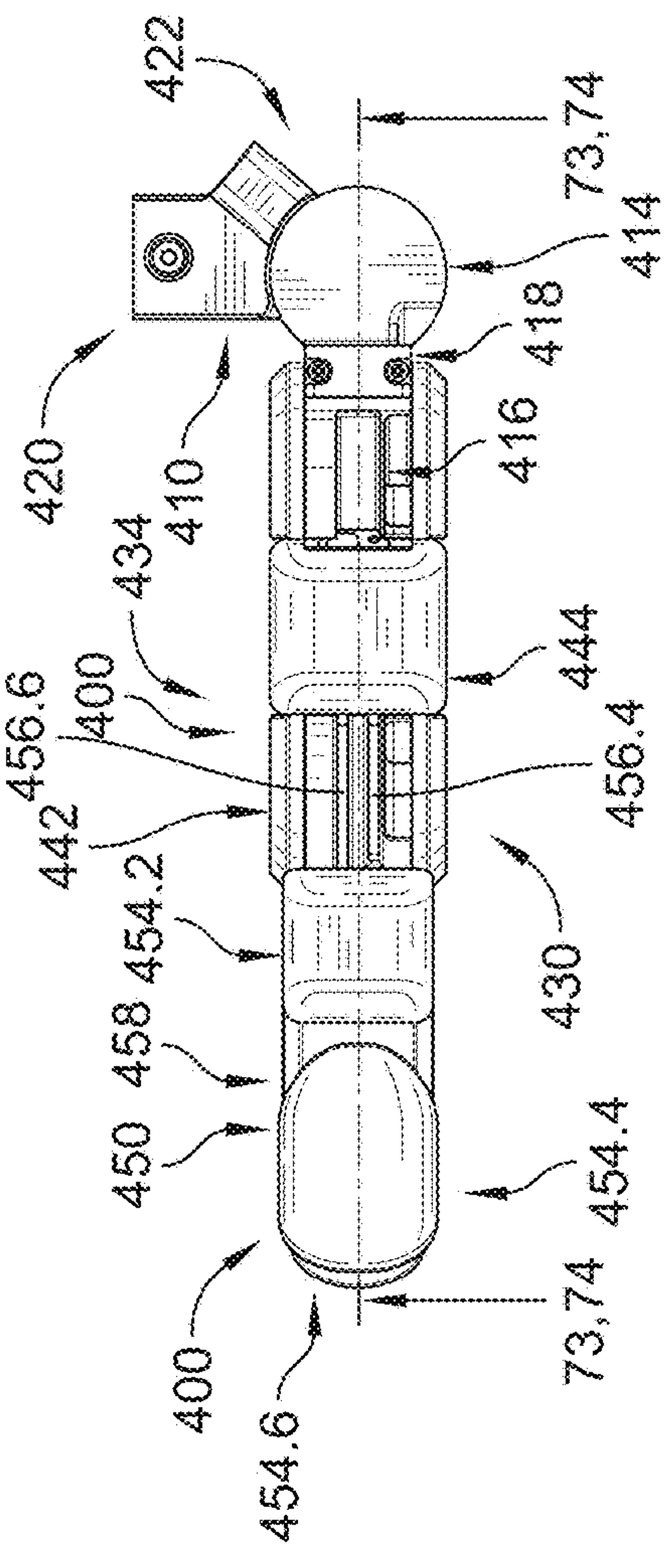
422
73,74
414
418
420
410
416
434
444
400
456.6
456.4
442
454.2
430
458
450
454.4
73,74
400
454.6

FIG. 75

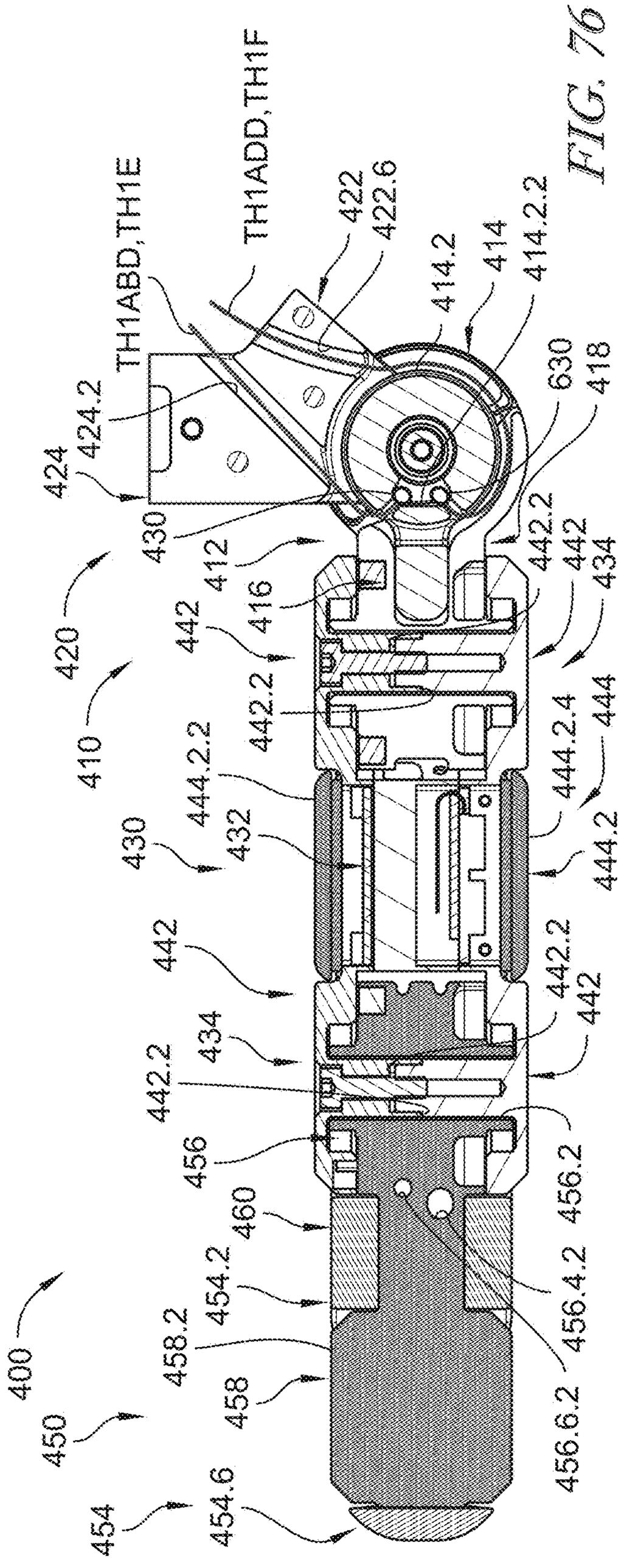
TH1ADD,TH1F
422
422.6
TH1ABD,TH1E
414.2
414
414.2.2
424.2
630
418
424
430
412
442.2
442
434
420
416
442
442.2
444
410
444.2.4
444.2.2
430
432
444.2
442
442.2
442
434
442.2
456
456.2
460
454.2
456.4.2
458.2
400
458
456.6.2
450
454
454.6

FIG. 76

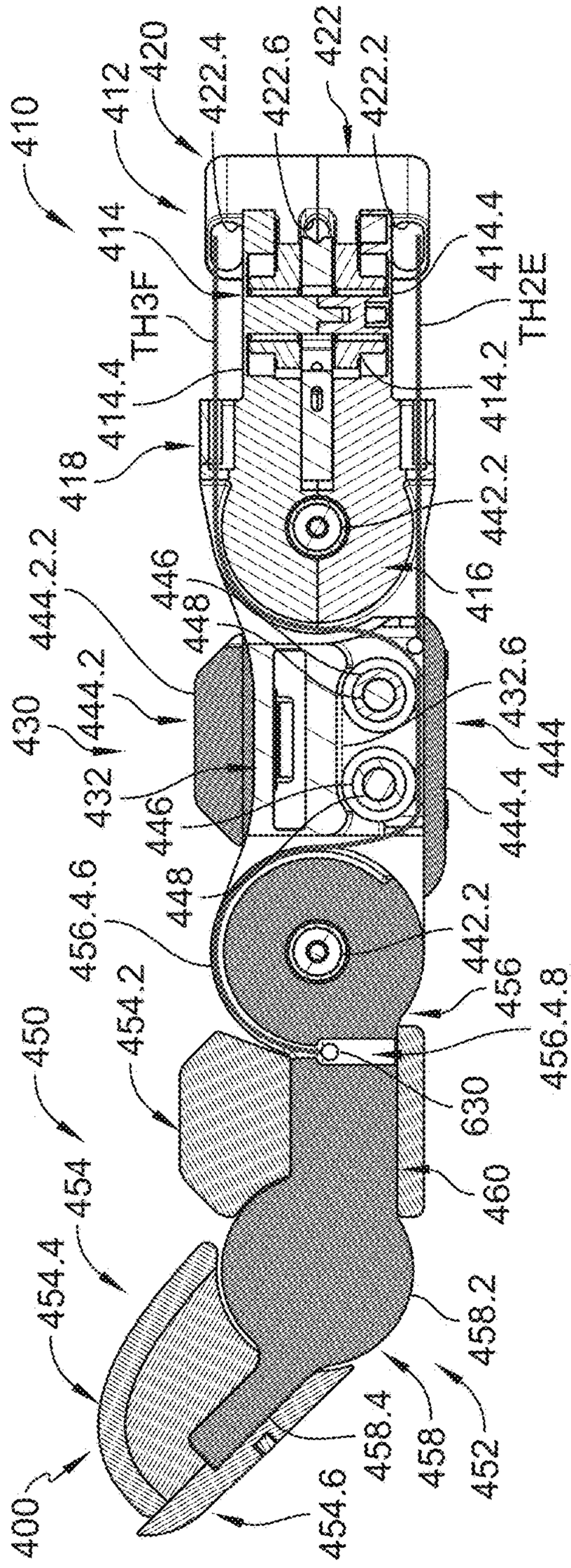
410
412
420
422.4
422.6
422
422.2
414
414.4
TH3F
TH2E
414.4
414.2
418
442.2
416
444.2.2
446
448
430
444.2
432.6
432
444
446
444.4
448
456.4.6
442.2
456
454.2
456.4.8
450
630
460
454
454.4
458.2
458.4
458
452
400
454.6

FIG. 77

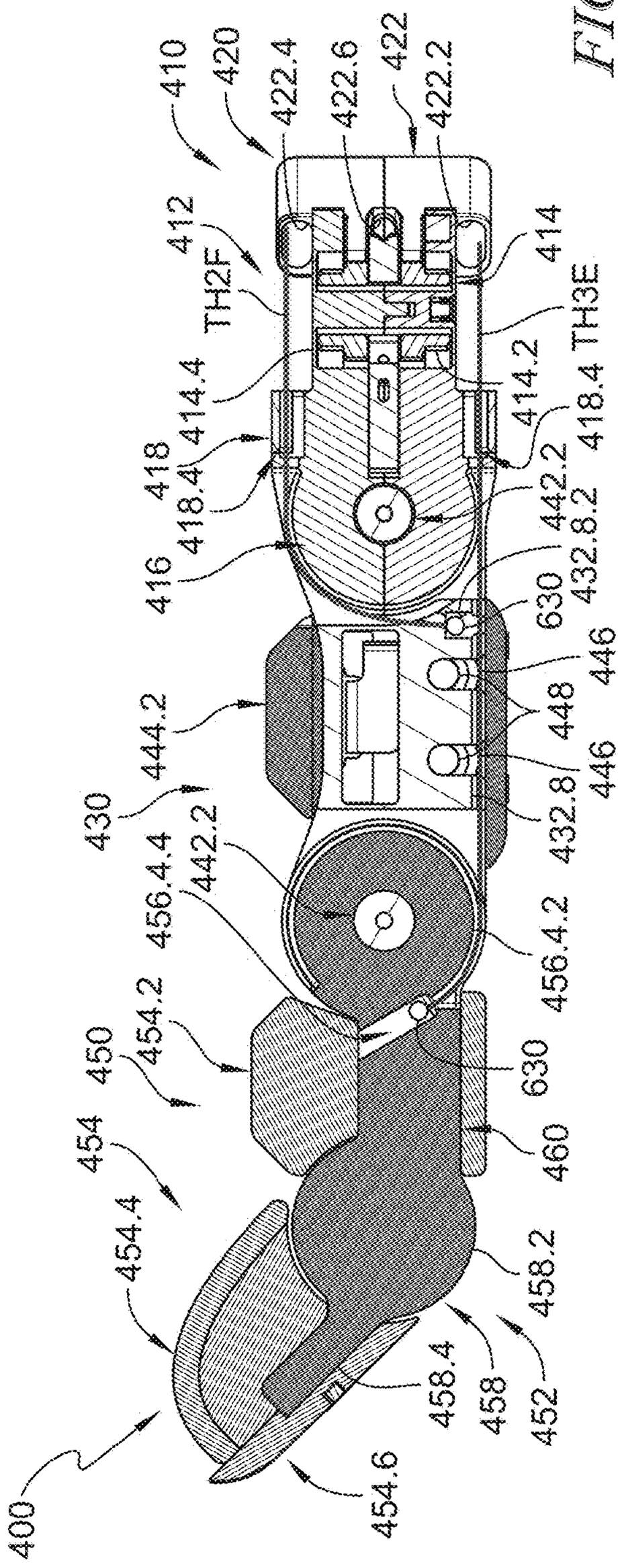
410
420
422.4
422.6
422
422.2
412
414
TH2F
TH3E
414.4
414.2
418.4
418
442.2
418.4
432.8.2
416
630
446
444.2
448
446
430
432.8
442.2
456.4.4
456.4.2
454.2
450
630
460
454
454.4
458.2
458.4
458
452
400
454.6

FIG. 78

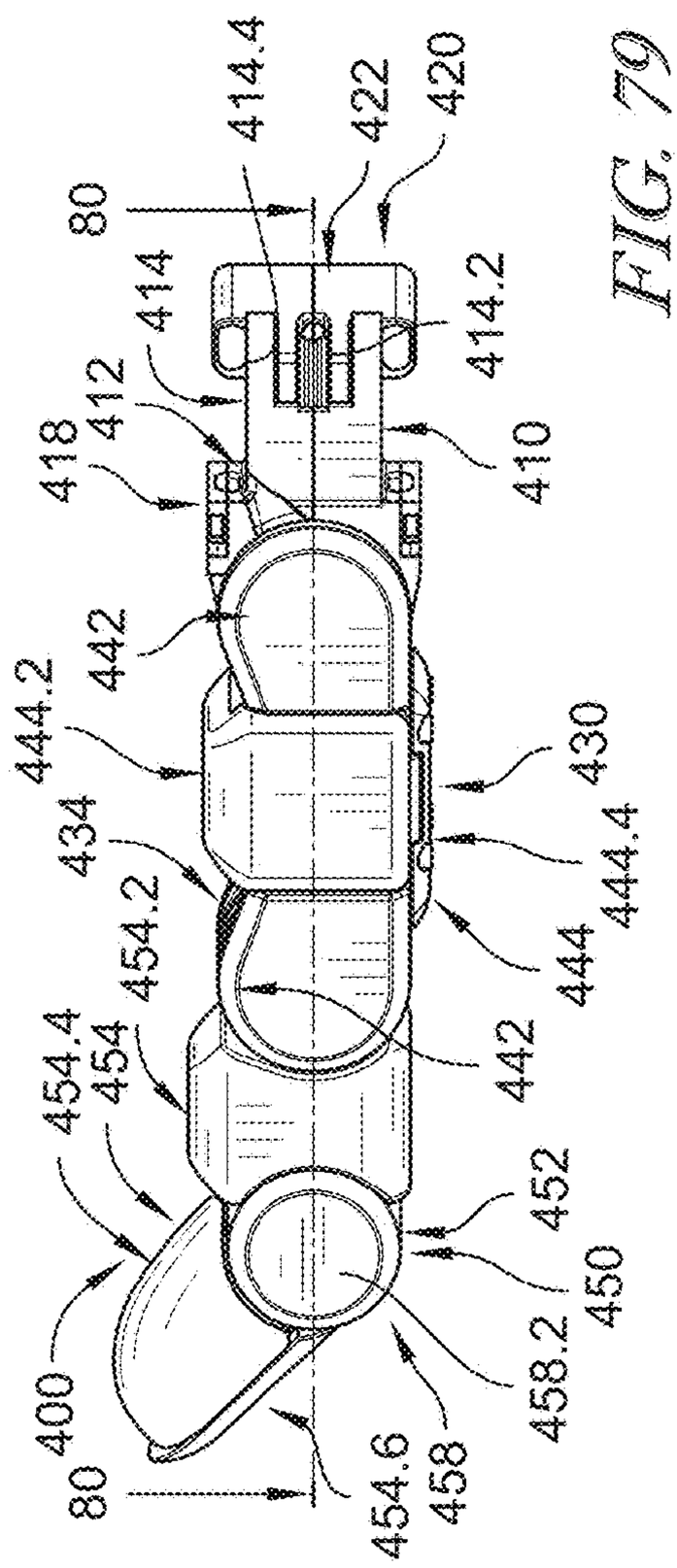
80
414.4
422
420
414
412
418
414.2
410
442
444.2
434
430
444.4
454.2
444
454.4
454
442
452
450
400
458.2
80
454.6
458

FIG. 79

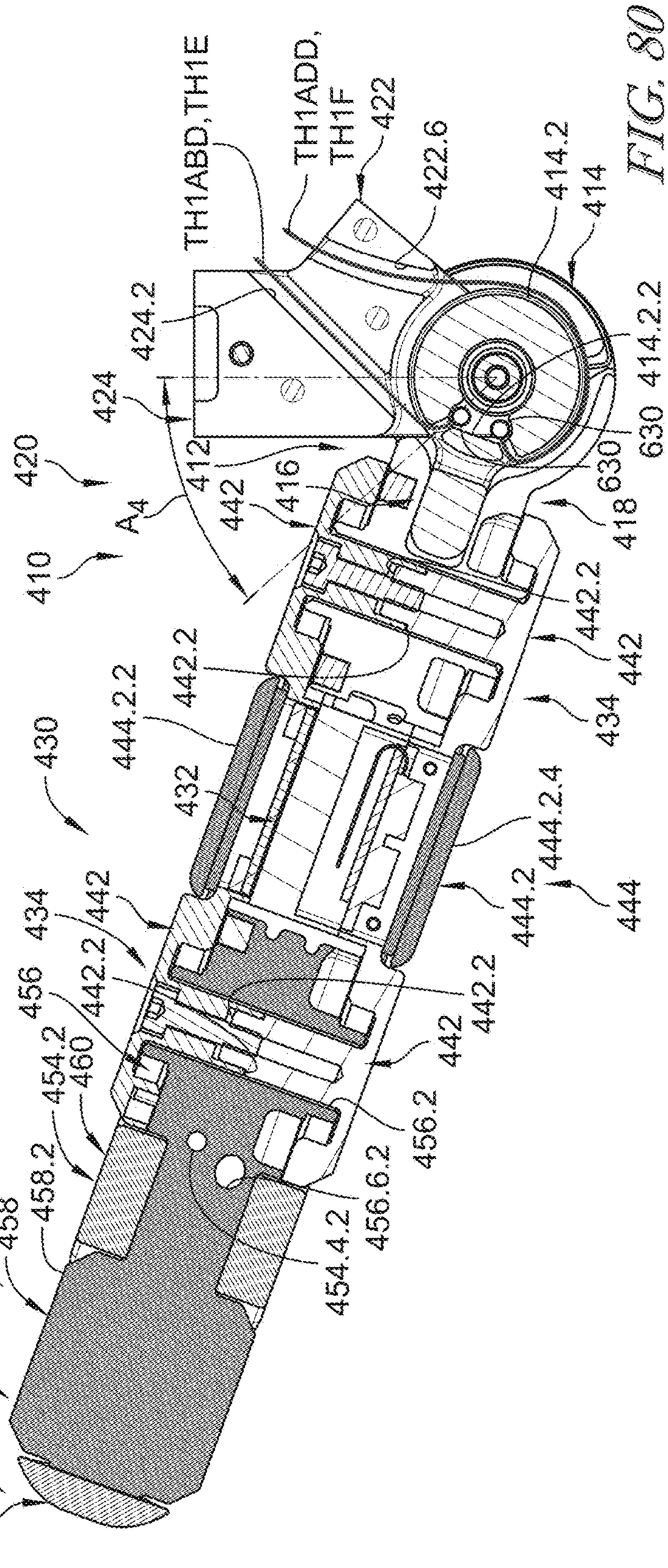
TH1ABD,TH1E
TH1ADD,
TH1F
422
422.6
414.2
414
424.2
414.2.2
424
630
420
412
416
630
A4
442
418
410
442.2
442
442.2
434
442
444.2.2
430
432
444.2.4
444.2
444
434
442
442.2
442.2
456
442
454.2
460
456.2
458.2
456.6.2
400
458
454.4.2
450
454
454.6

FIG. 80

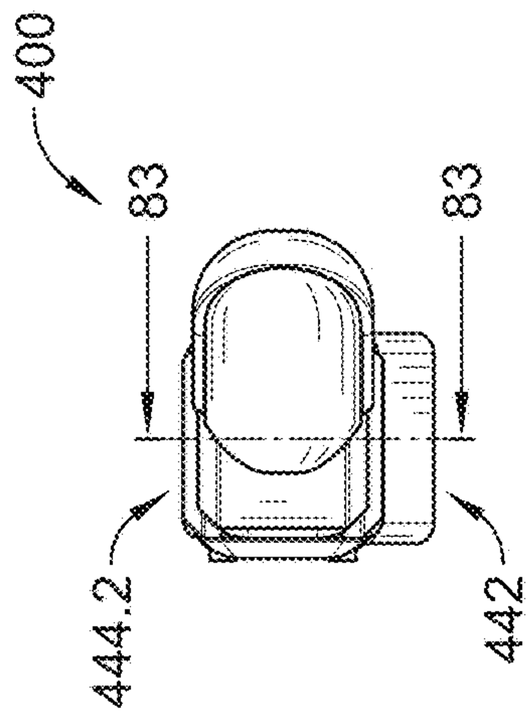
400
83
83
444.2
442

FIG. 82

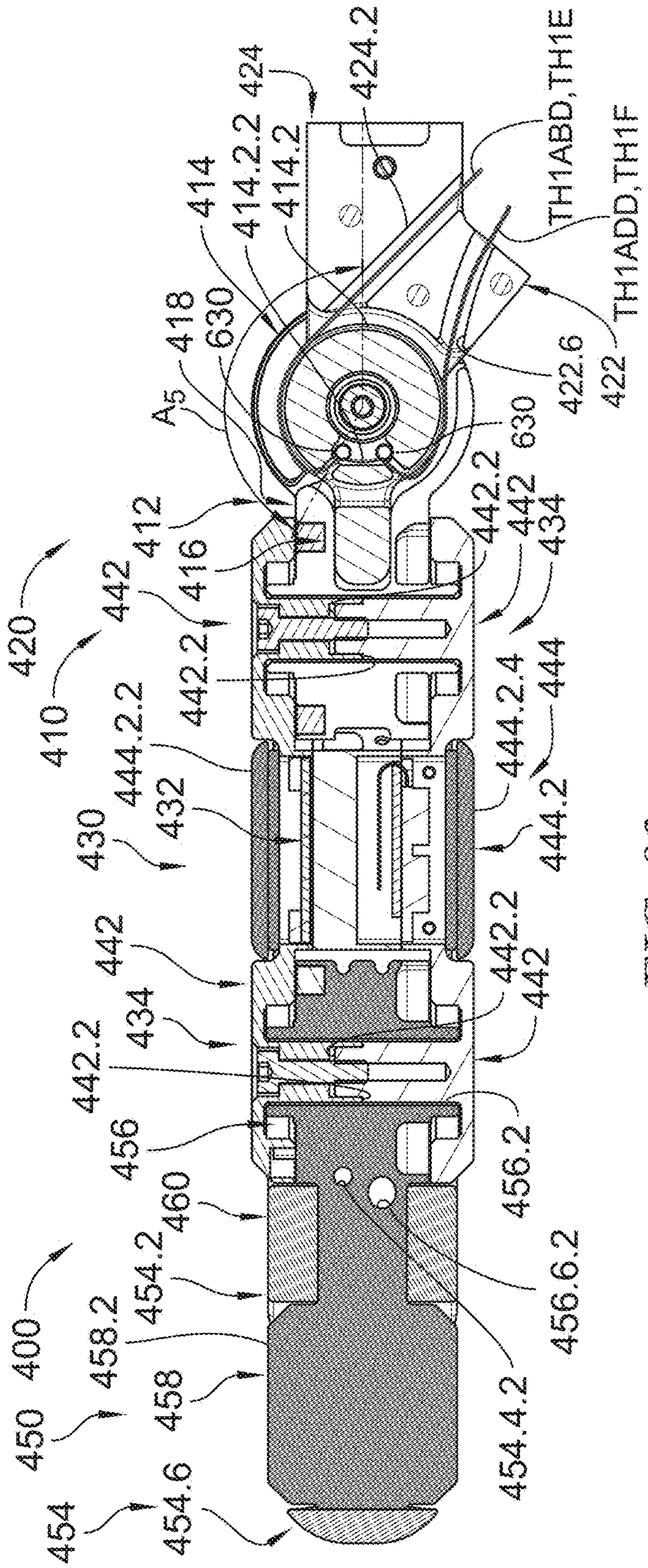
424
424.2
414
414.2.2
414.2
418
630
A5
TH1ABD,TH1E
TH1ADD,TH1F
422.6
422
630
442.2
442
434
412
416
420
442
410
442.2
444.2.4
444
444.2.2
432
430
444.2
442
442.2
442
434
442.2
456
456.2
460
454.2
458.2
400
458
450
454.4.2
456.6.2
454.6
454

FIG. 83

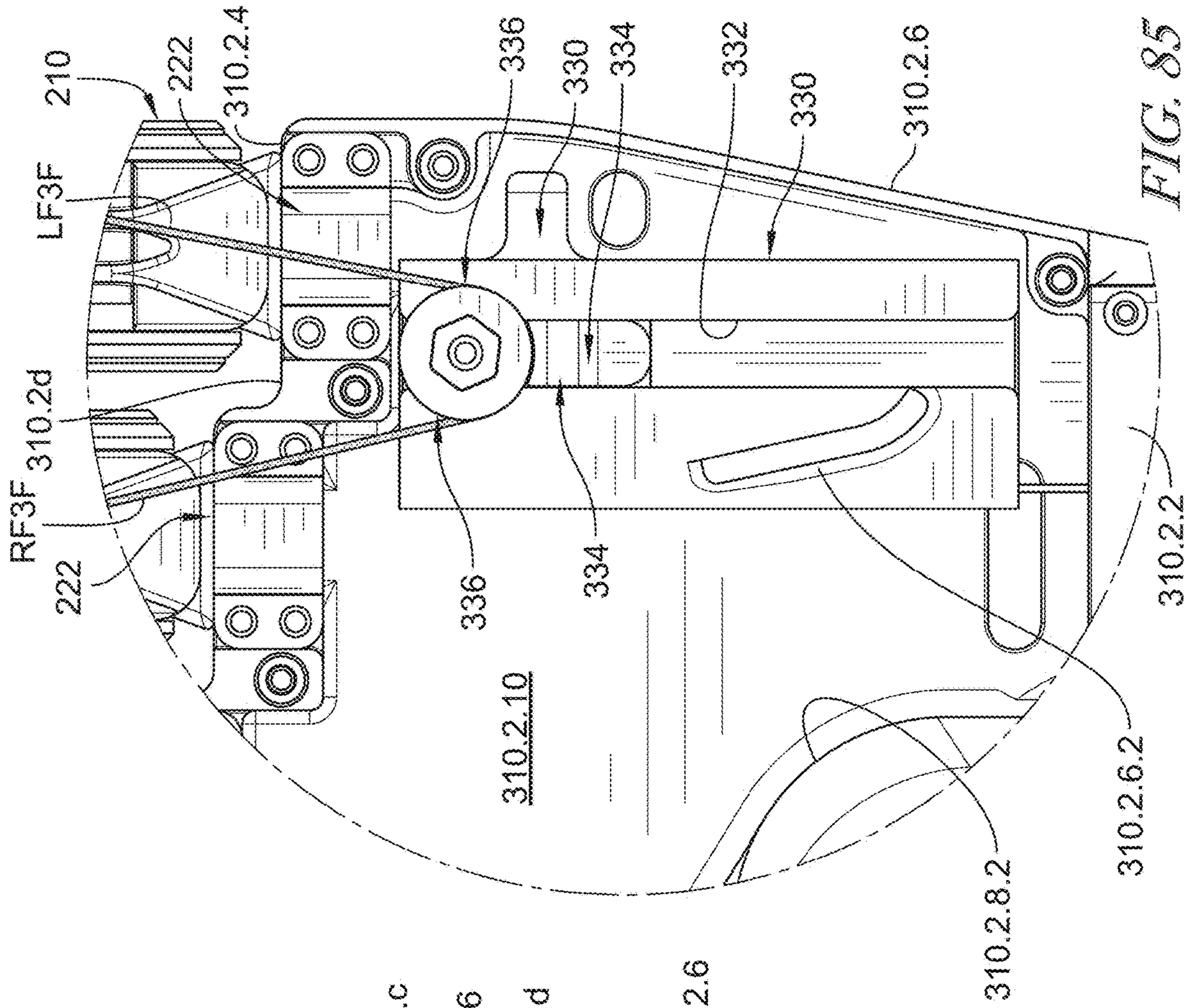
210
LF3F
222
310.2.4
336
330
334
332
330
310.2.6
310.2d
RF3F
222
336
334
310.2.10
310.2.6.2
310.2.8.2
310.2.2

FIG. 85

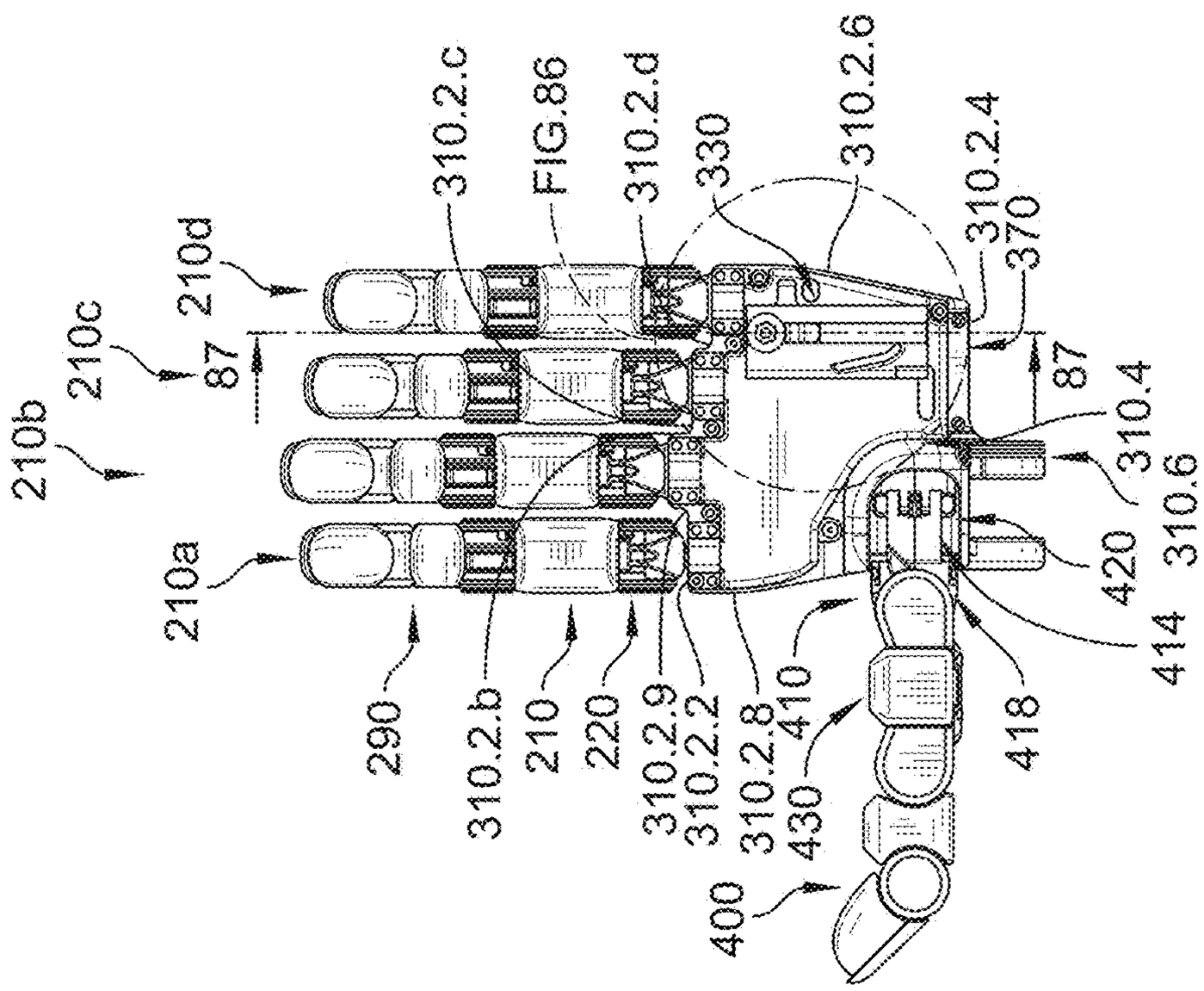
210b
210c
210d
210a
87
290
310.2.b
210
220
310.2.9
310.2.2
310.2.8
430
400
410
418
414
420
310.6
310.4
87
370
310.2.6
310.2.4
330
310.2.d
FIG.86
310.2.c

FIG. 84

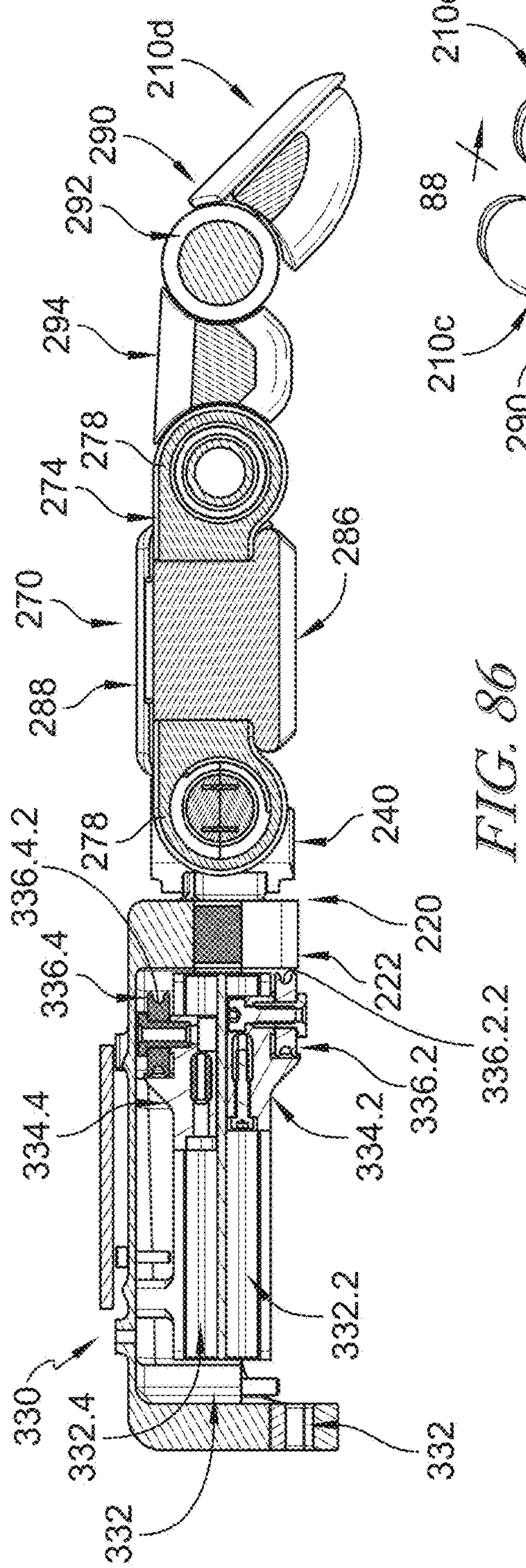
210d
290
292
294
278
274
270
288
286
278
240
336.4.2
220
336.4
222
336.2.2
336.2
334.4
334.2
332.2
330
332.4
332

FIG. 86

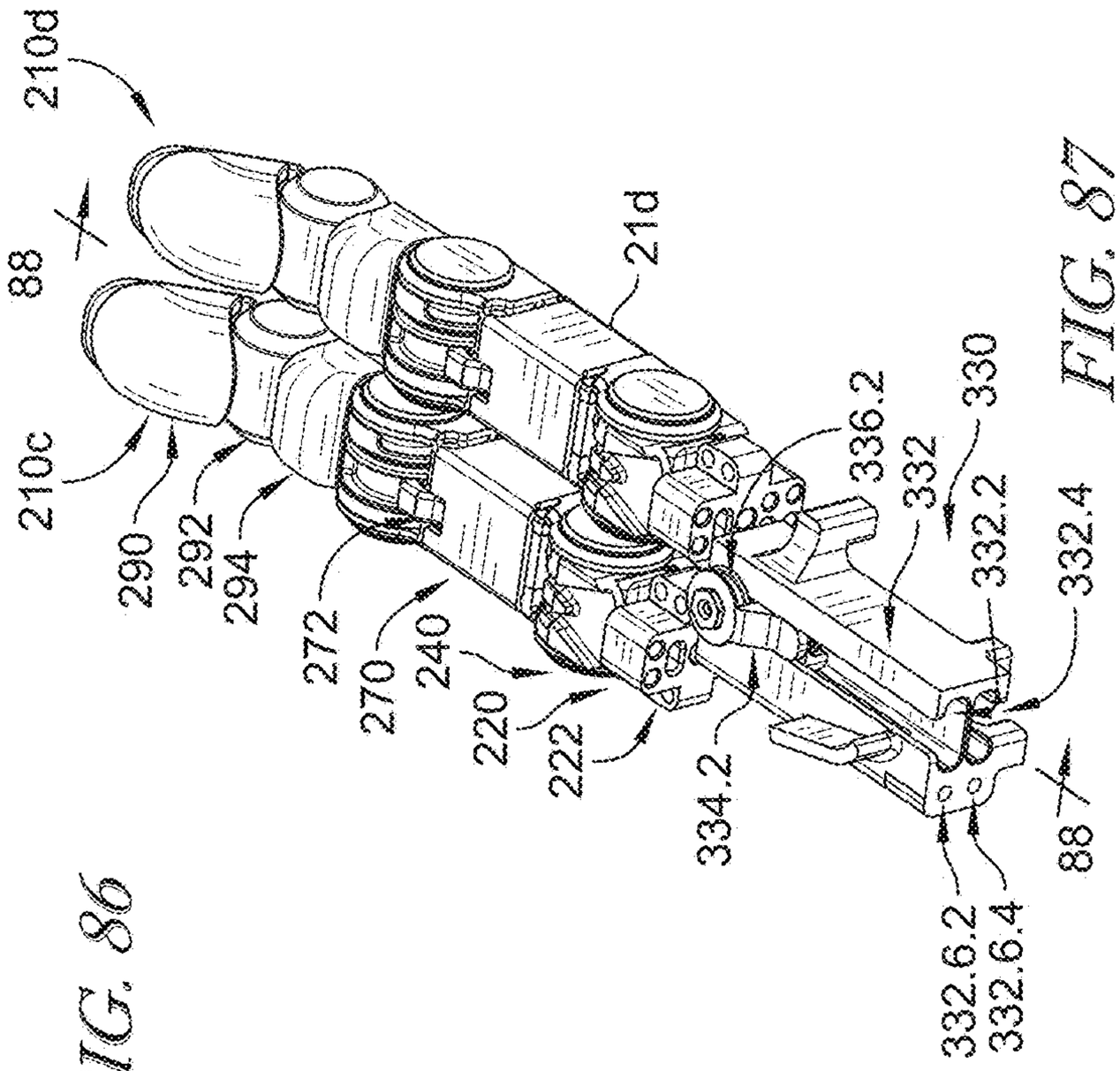
210d
88
21d
210c
290
292
294
272
270
240
220
222
334.2
336.2
332
330
332.2
332.4
332.6.2
332.6.4
88

FIG. 87

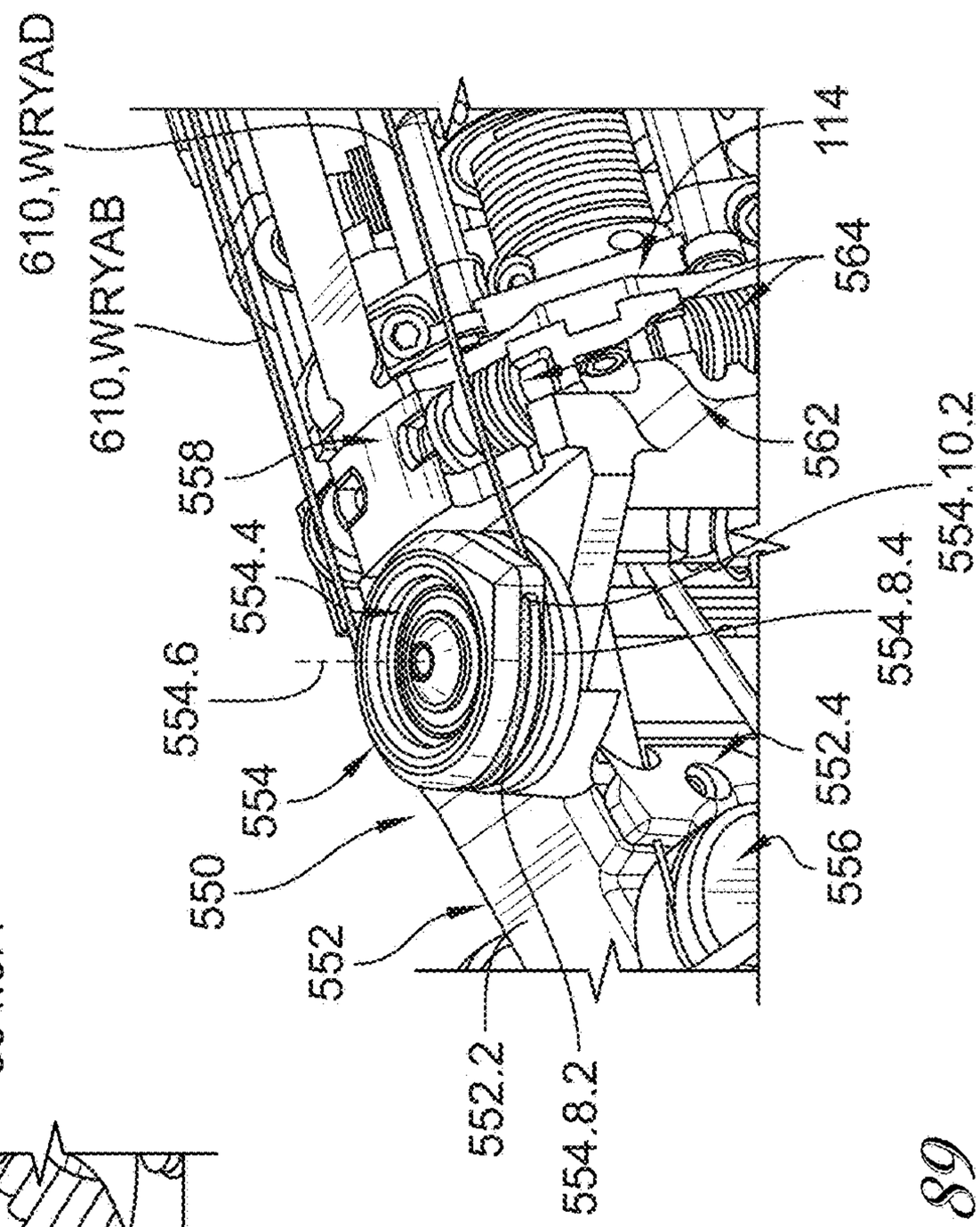
610,WRYAD
610,WRYAB
558
554.4
554.6
550
554
552
552.2
554.8.2
554.8.4
554.10.2
562
564
114
556

FIG. 89

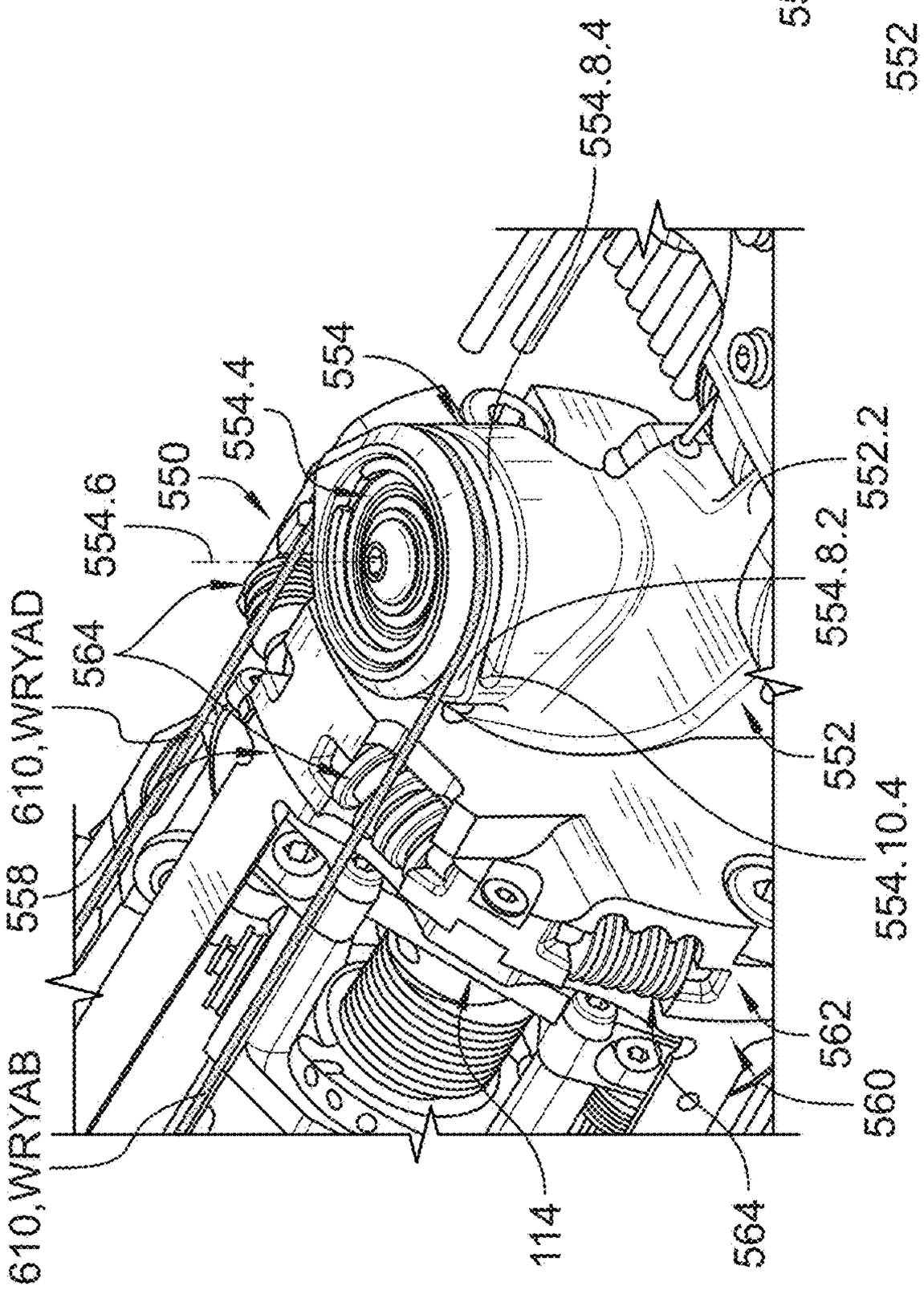
610,WRYAB
610,WRYAD
558
564
554.6
550
554.4
554
554.8.4
552.2
554.8.2
552
554.10.4
562
560
114
564

FIG. 88

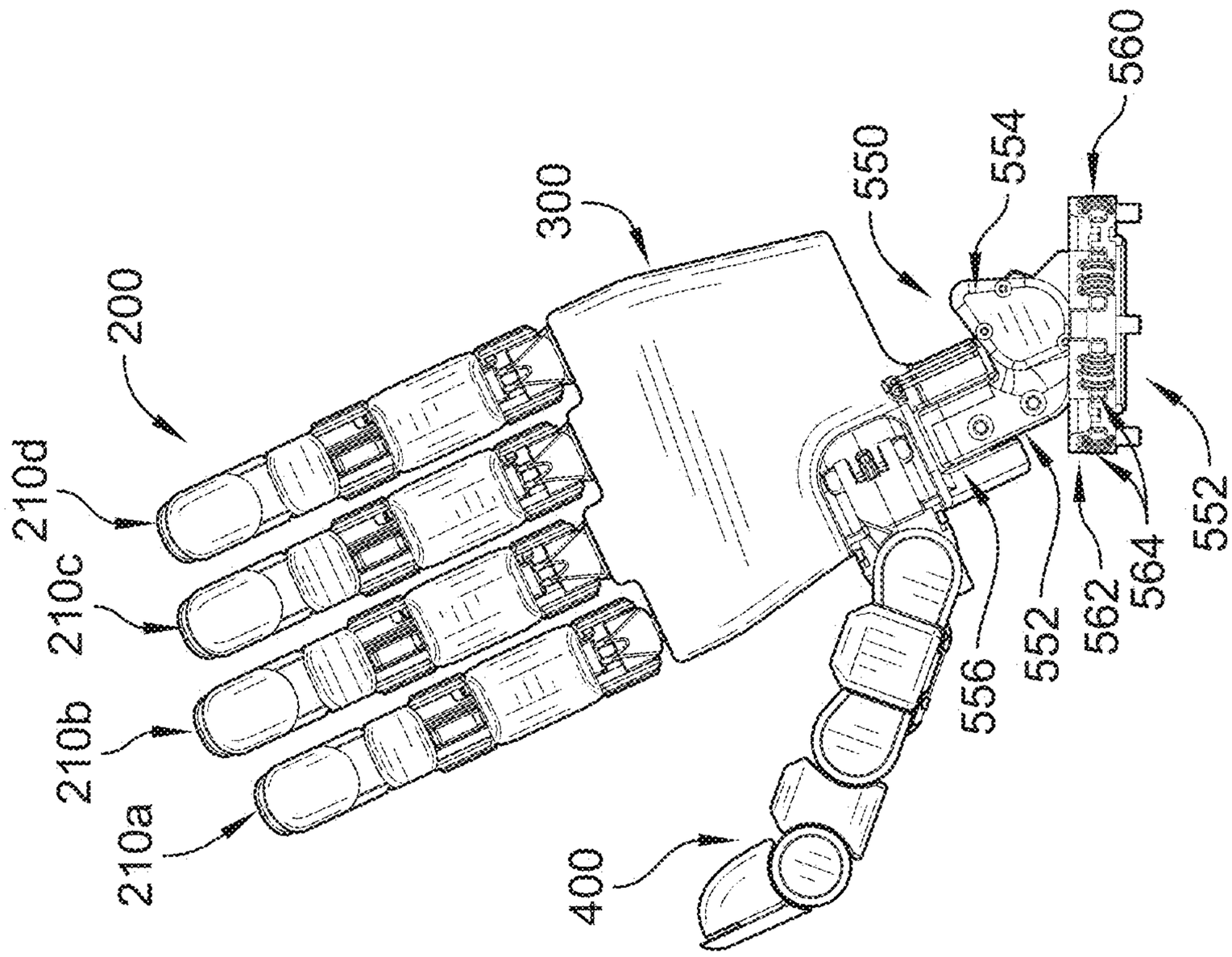
200
210a
210b
210c
210d
300
400
550
554
560
552
562
564
556

FIG. 91

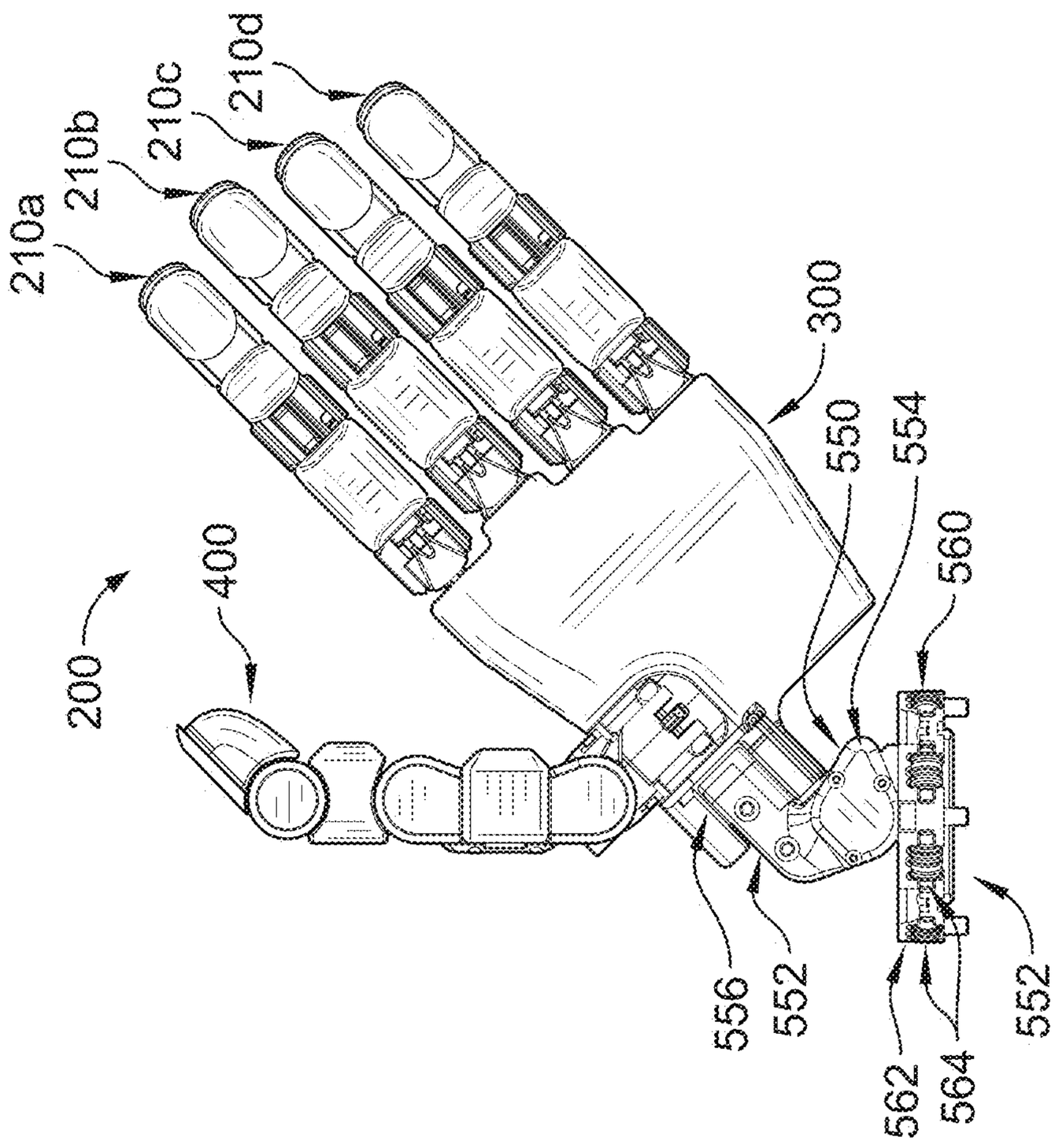
200
210a
210b
210c
210d
300
400
550
554
560
552
562
564
556

FIG. 90

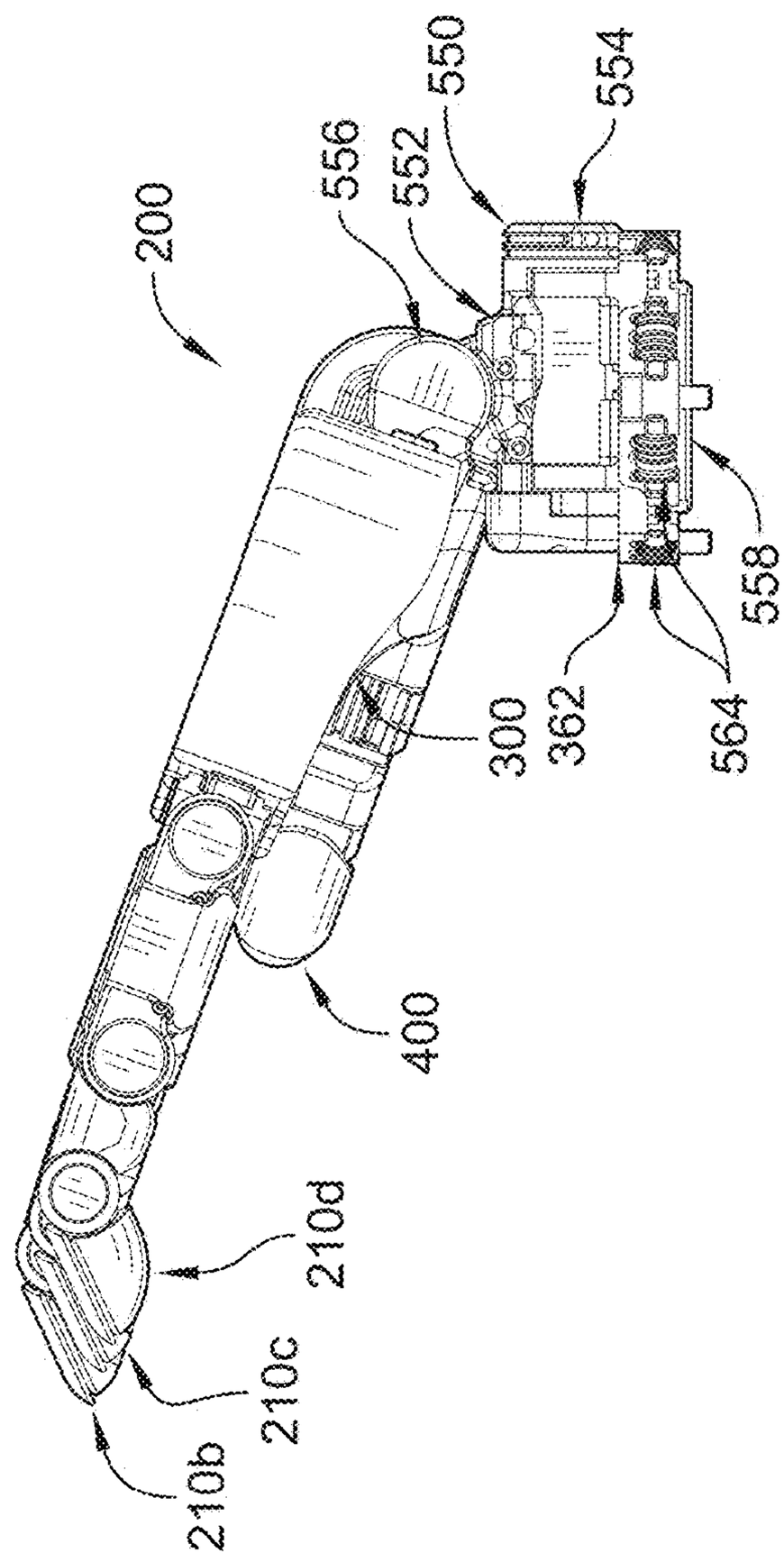
200
556
552
550
554
558
564
362
300
400
210d
210c
210b

FIG. 92

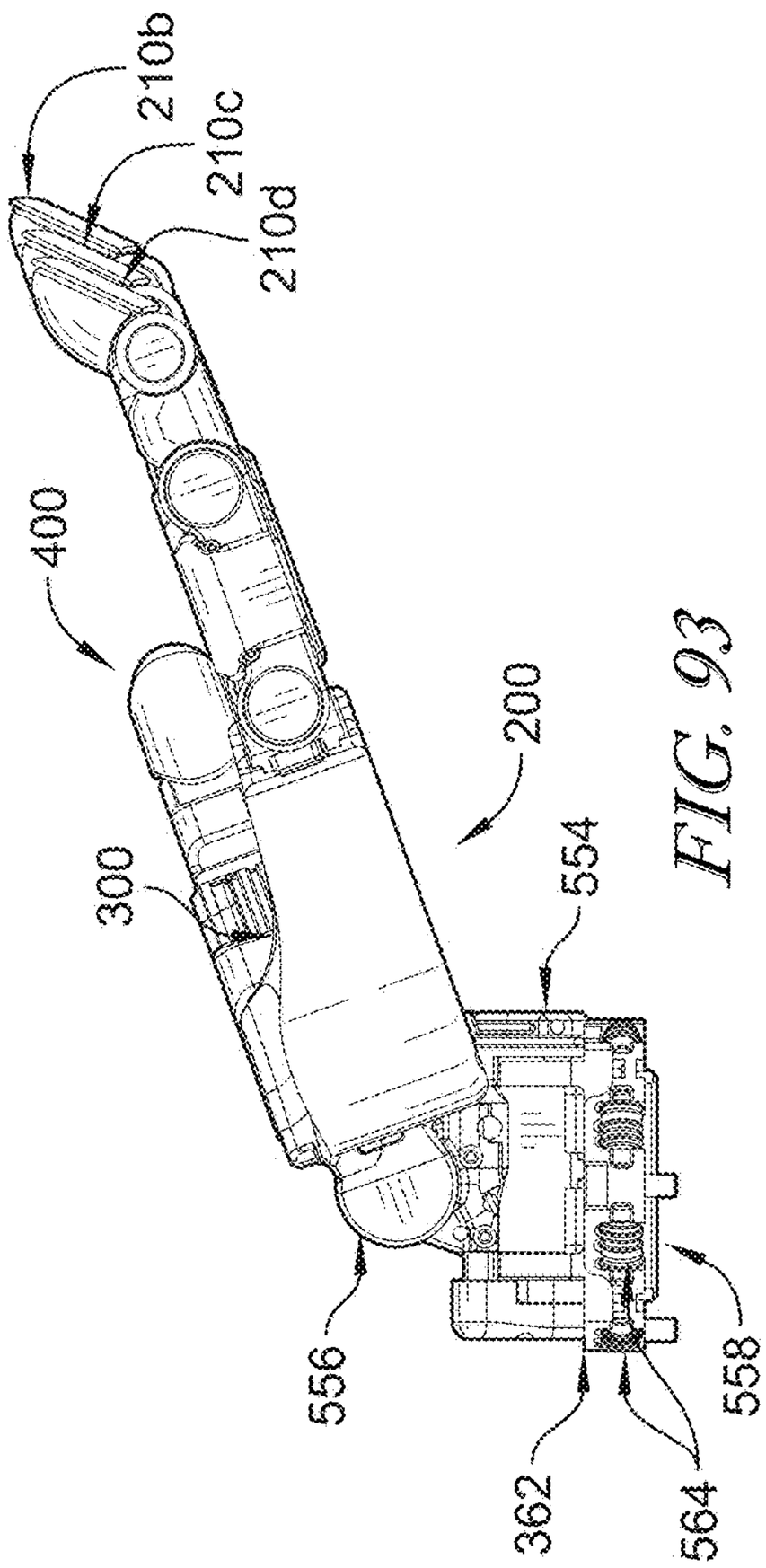
210b
210c
210d
400
200
300
554
556
558
362
564

FIG. 93

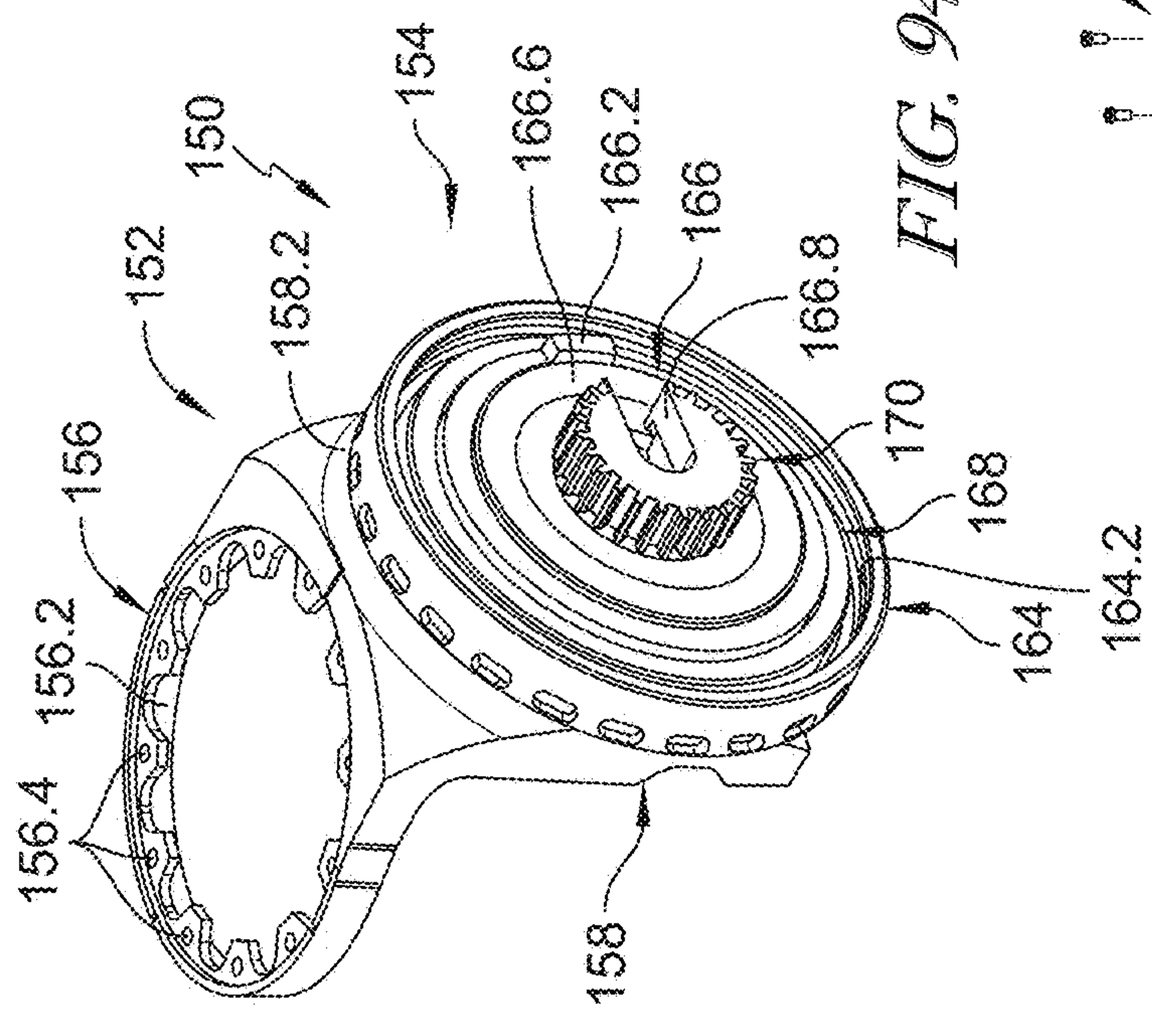
150
152
158.2
154
166.6
166.2
166
166.8
170
168
164.2
164
156
156.2
156.4
158

FIG. 94

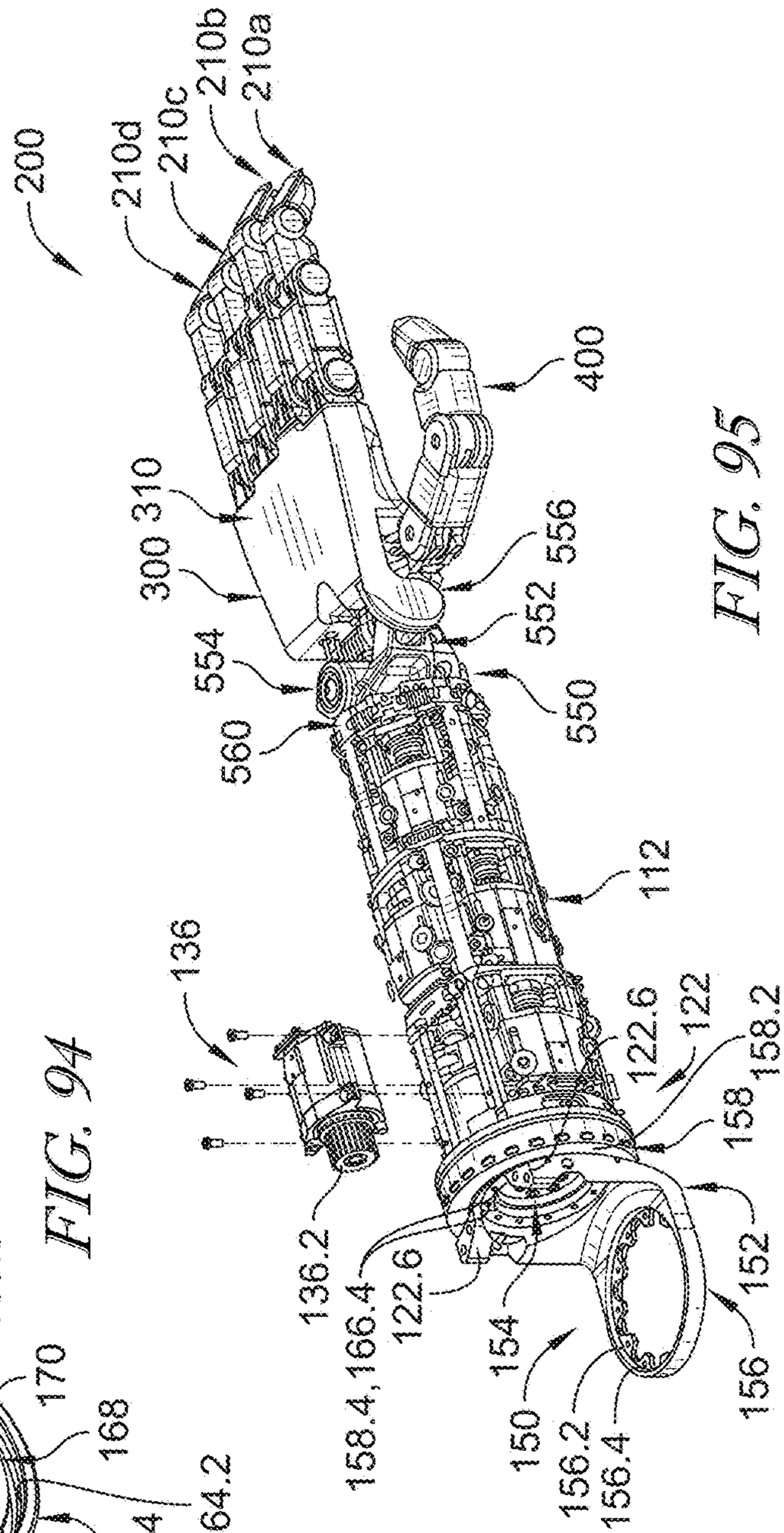
200
210d
210c
210b
210a
400
310
300
556
552
554
550
560
112
136
122.6
122
158.2
158
152
136.2
158.4,166.4
122.6
154
150
156.2
156.4
156

FIG. 95

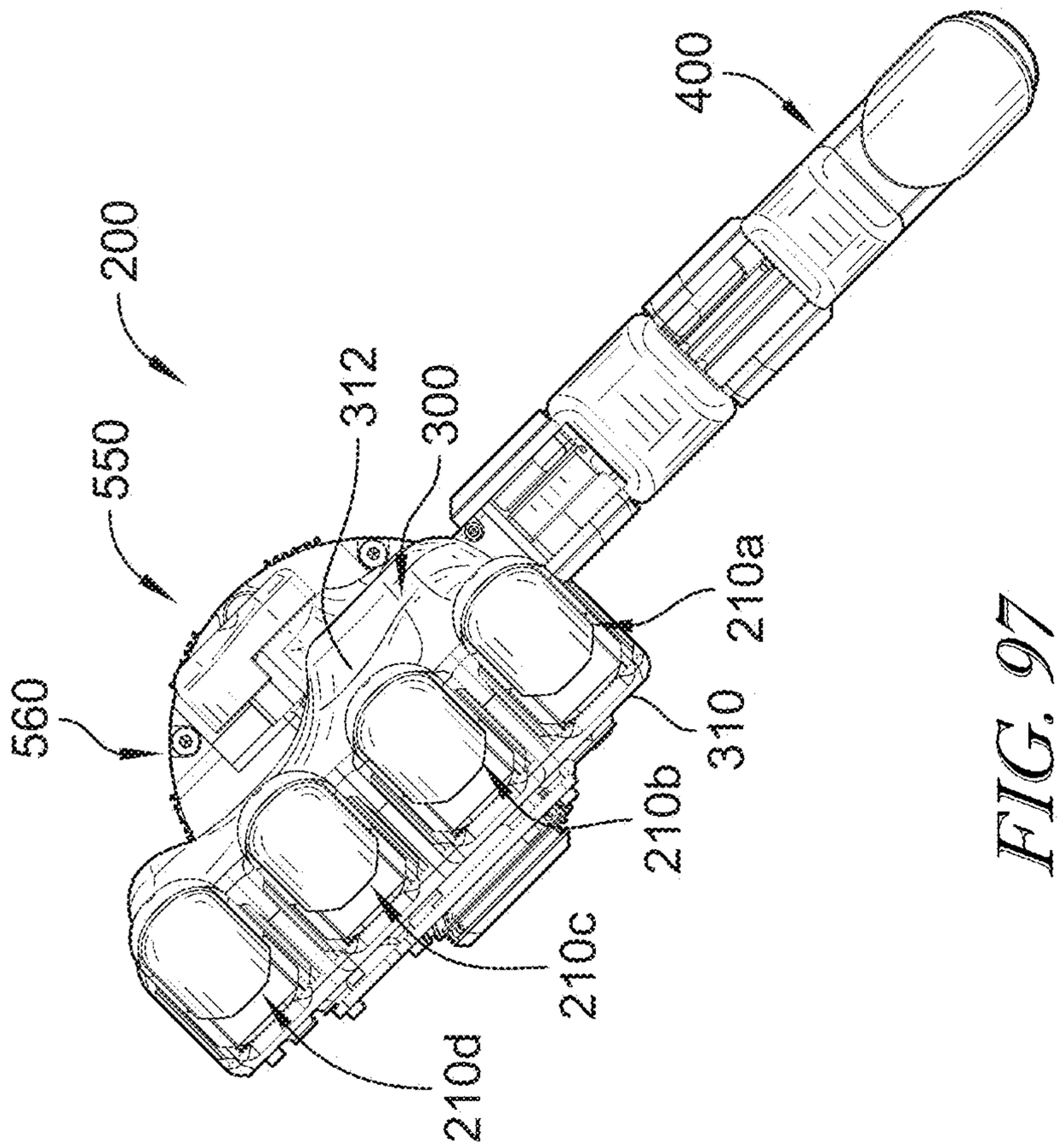
400
200
312
300
550
210a
560
310
210b
210c
210d

FIG. 97

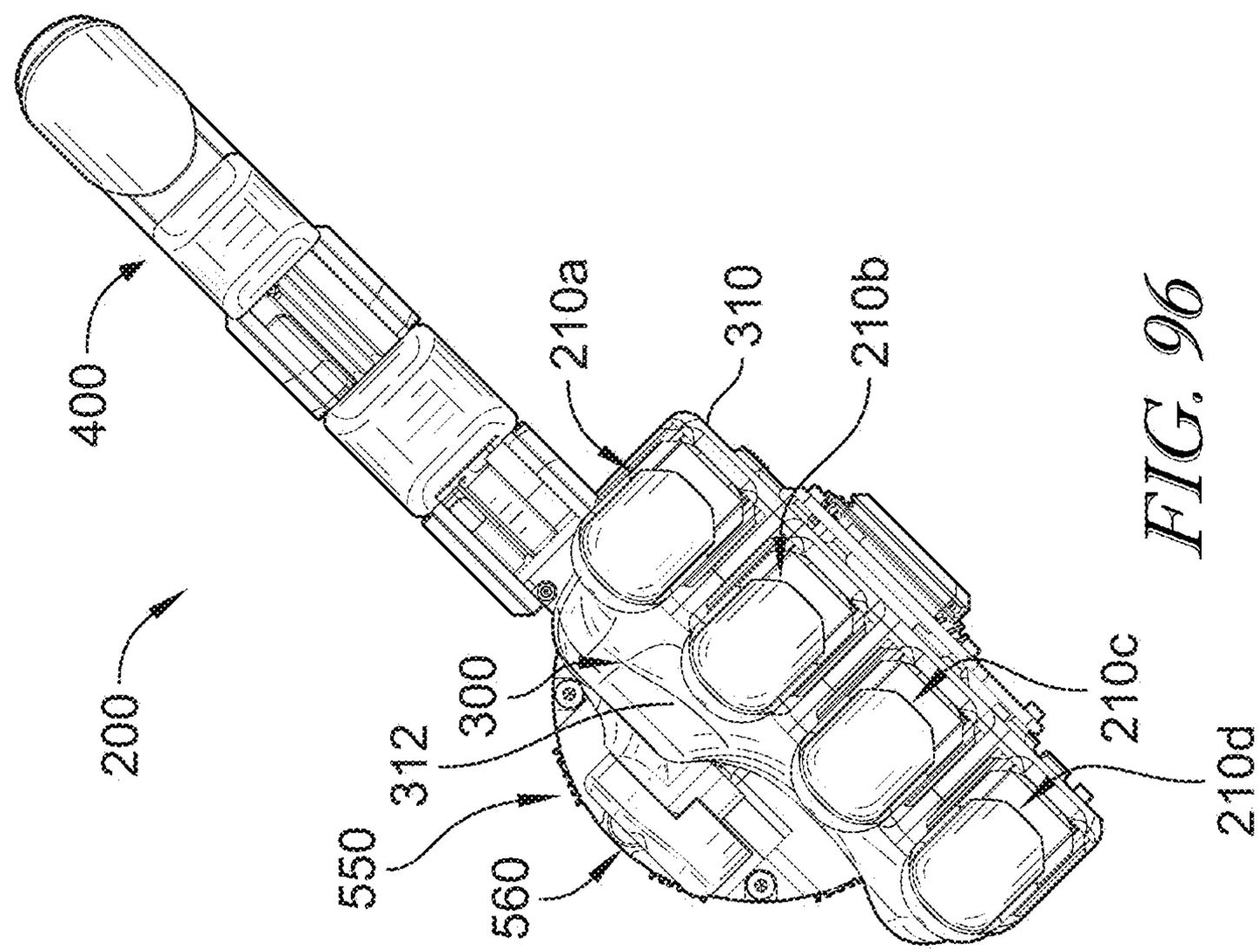
400
210a
310
210b
200
300
312
550
560
210c
210d

FIG. 96

LOWER ARM ASSEMBLY OF A ROBOT

PRIORITY CLAIM AND CROSS-REFERENCE TO RELATED APPLICATIONS

[0001] This application is a continuation-in-part application of U.S. patent application Ser. No. 19/173,793, filed Apr. 8, 2025, which claims the benefit of and priority to U.S. Provisional Application No. 63/680,381, filed Aug. 7, 2024, and U.S. Provisional Patent Application No. 63/575,887, filed Apr. 8, 2024, each of which is expressly incorporated by reference herein in its entirety.

[0002] Reference is hereby made to: (i) PCT Application Nos. PCT/US25/10425, PCT/US25/11450, PCT/US25/12544, PCT/US25/16930, PCT/US25/19793, PCT/US25/23064, PCT/US25/23325, PCT/US25/24817, PCT/US25/25005, (ii) U.S. patent application Ser. Nos. 18/919,263, 18/919,274, 19/000,626, 19/006,191, 19/038,657, 19/064,596, 19/066,122, 19/180,106, and (iii) U.S. Provisional Patent Application Nos. 63/557,874, 63/558,373, 63/561,307, 63/561,311, 63/561,313, 63/561,315, 63/564,741, 63/565,077, 63/573,226, 63/573,543, 63/574,349, 63/614,499, 63/615,766, 63/617,762, 63/620,633, 63/625,362, 63/625,370, 63/625,381, 63/625,384, 63/625,389, 63/625,405, 63/625,423, 63/625,431, 63/626,028, 63/626,030, 63/626,034, 63/626,035, 63/626,037, 63/626,039, 63/626,040, 63/626,105, 63/632,630, 63/632,683, 63/633,113, 63/633,405, 63/633,920, 63/634,599, 63/634,697, 63/685,856, 63/696,507, 63/696,533, 63/700,749, 63/706,768, 63/707,547, 63/708,003, 63/722,057, 63/633,941, 63/635,152, 63/556,102, 63/561,317, 63/561,318, and 63/766,911, each of which is expressly incorporated by reference herein in its entirety.

TECHNICAL FIELD

[0003] This disclosure relates generally to robotic systems and, more specifically, to a lower arm assembly for a general-purpose humanoid robot. The lower arm assembly includes a forearm, a wrist, and an end effector or hand and incorporates various sub-assemblies and components, along with the connections between these components. This integrated design provides the lower arm assembly with the capacity to substantially replicate the movements, capabilities, and physical configuration of a human arm and hand.

BACKGROUND

[0004] The contemporary workplace landscape is confronted by a significant labor shortage, which is evidenced by over 10 million unfilled positions in the United States. These positions are often characterized as unsafe, undesirable, or physically demanding. This escalating challenge underscores the critical need for the development and integration of advanced robotic systems. Such systems must be capable of performing tasks that are hazardous, unappealing, or too physically strenuous for human workers. General-purpose humanoid robots represent a promising solution to address this labor gap. These robots are designed specifically for human-centric environments and typically emulate human morphology, featuring a bipedal design with two legs, two arms, and a head-like structure.

[0005] For these humanoid robots to operate effectively and fulfill tasks within environments designed for humans, the lower arm assembly, and particularly the end effector or hand, is a component of paramount importance. This requirement extends beyond superficial resemblance; the robotic hand must be capable of seamlessly interacting with and physically manipulating a diverse range of objects within complex and unstructured settings. Furthermore, such interaction must be achievable in a durable, cost-effective, and controllable manner, operating efficiently within the inherent constraints of the robot's resources, notably its limited battery power.

[0006] However, current robotic hand technologies frequently fail to meet these demanding and multifaceted requirements. Existing designs often struggle to replicate the full range of motion, flexibility, and adaptability that are characteristic of the human hand. Many robotic hands exhibit significant limitations in performing tasks that require fine motor skills, such as the delicate grasping and manipulation of objects with varied sizes, shapes, and textures. Deficiencies also persist in the execution of complex, coordinated movements that involve multiple digits operating simultaneously. Additionally, providing adequate force and precise control, especially for delicate operations, remains a substantial challenge. Moreover, practical challenges concerning power consumption and long-term durability continue to persist in current robotic hand designs. The integration of necessary actuators and complex control systems directly within the hand often results in bulky and oversized configurations. This increased size and mass can limit the robot's ability to access confined spaces or perform intricate tasks that demand high dexterity. Consequently, this restricts the potential applications of humanoid robots in numerous industrial, service, and healthcare sectors where human-like manipulation is an essential prerequisite. Therefore, there is a clear and unmet need for a complex lower arm with an advanced end effector.

SUMMARY OF INVENTION

[0007] The presently disclosed subject matter is directed to a humanoid robot. Particularly, the robot comprises an upper region including at least: (i) a head, (ii) a torso, (iii) an arm having: (a) an elbow assembly, (b) a forearm assembly, and (c) a wrist assembly. The forearm assembly includes a forearm frame having: (i) a forearm axis that is substantially centered within an extent of the forearm frame, (ii) a proximal end coupled to an extent of the elbow assembly, (iii) a proximal mounting portion positioned adjacent to the proximal end, (iv) a distal end coupled to an extent of the wrist assembly, (v) a distal mounting portion positioned adjacent to the distal end. The forearm assembly also includes a first plurality of actuators coupled to the proximal mounting portion and arranged radially around the forearm axis, wherein a first actuator contained in the first plurality of actuators is in contact with a first tendon and includes a first tendon departure region. The forearm assembly further includes a second plurality of actuators coupled to the distal mounting portion and arranged radially around the forearm axis, wherein a second actuator contained in the second plurality of actuators is in contact with a second tendon and includes a second tendon departure region. The first tendon departure region is positioned at a first distance from the wrist assembly and the second tendon departure region is positioned at a second distance from the wrist assembly, wherein the first distance is not equal to the second distance. The humanoid robot also comprises a lower

region spaced apart from the upper region and including a pair of legs, and a central region interconnecting the upper region and the lower region.

[0008] The presently disclosed subject matter is directed to a humanoid robot. Particularly, the robot comprises an upper region including: (i) a head, (ii) a torso, (iii) an arm coupled to the torso and including: (a) a forearm assembly, (b) a wrist assembly coupled to the forearm assembly, and (c) an end effector coupled to the wrist assembly. The wrist assembly includes a left base member, a right base member, a rotational axis that extends between the left and right base members, and a carpal tunnel-like structure coupled to the end effector and having an opening formed therein. The opening includes a centroid, and the centroid of the opening formed in the carpal tunnel-like structure is offset from the rotational axis, whereby said centroid does not lie on the rotational axis. The humanoid robot also comprises a lower region spaced apart from the upper region and including a pair of legs, and a central region interconnecting the upper region and the lower region.

[0009] Disclosed herein are embodiments of a humanoid robot featuring an advanced forearm, wrist, and end effector system. The forearm assembly incorporates a frame with a tapered design, where the proximal end has a larger perimeter, circumference, and/or diameter than the distal end. Housed within this forearm are a plurality of actuators, specifically more than six but fewer than twenty motors, which are coupled to a tendon-based actuation system. In some embodiments, a non-tendon-based actuator, such as a linear actuator, is also positioned at least partially between the elbow assembly and the proximal and distal ends of the forearm frame, augmenting the system's capabilities. The end effector, which includes a housing and a finger assembly, is designed to have more than 19 but less than 24 degrees of freedom, providing a high level of dexterity while maintaining a compact design with fewer than 20 motors. A protective glove may substantially encase the end effector, the wrist assembly, and a portion of the forearm.

[0010] The system utilizes a sophisticated tendon-based transmission to actuate the end effector's movements. To facilitate this, a carpal tunnel-like structure is configured to guide the tendons from the forearm assembly, through the wrist, and into the housing of the end effector. Individual tendons may be further routed through sheaths that have extents positioned within this carpal tunnel-like structure and extending towards both the finger assembly and the wrist assembly. The design accounts for the operational demands on the tendons; for instance, a first tendon may have a greater total curvature than a second tendon, where the second tendon is associated with a greater application of force or a higher frequency of use. To manage tendon tension and dynamics, some embodiments may further include biasing members in contact with the tendons.

[0011] A multi-component wrist assembly couples the housing of the end effector to the forearm assembly. This wrist assembly comprises a base structure for coupling to the forearm, a yaw component coupled to a housing coupling component to provide side-to-side movement (i.e., yaw) relative to the forearm assembly, and a pitch component coupled to the yaw component for up-and-down movement (i.e., pitch) of the end effector relative to the forearm assembly. The pitch component may include a cable guide specifically designed to route at least one of the tendons around a portion of its structure, ensuring smooth and reliable transmission of force from the actuators in the forearm to the joints of the end effector.

[0012] The presently disclosed subject matter is directed to a humanoid robot. Particularly, the robot comprises an upper region that includes: (i) a head, (ii) a torso, (iii) a pair of arms coupled to the torso, (iv) a forearm assembly coupled to each arm of the pair of arms, and (v) an end effector coupled to each forearm assembly. Each said end effector includes an index finger assembly, a middle finger assembly positioned proximate to the index finger assembly, a ring finger assembly positioned proximate to the middle finger assembly, a little finger assembly positioned proximate to the ring finger assembly, and a thumb assembly. The end effector also includes a housing having a base, and wherein said housing is coupled to the index finger, middle finger, ring finger, little finger, and thumb assemblies. The housing of the end effector includes a first interior wall extent, a second interior wall extent positioned a first distance from the first interior wall extent, a third interior wall extent, and a fourth interior wall extent positioned a second distance from the third interior wall extent. The second distance is located closer to the base of the housing than the first distance, and the first distance is less than 45% of the second distance. The robot further comprises a plurality of tendons coupled to at least the index finger assembly and the middle finger assembly. These tendons are positioned to pass between both: (i) the first and second interior wall extents, and (ii) the third and fourth interior wall extents. The robot also includes a lower region spaced apart from the upper region and including a pair of legs, and a central region interconnecting the upper region and the lower region.

[0013] The presently disclosed subject matter is also directed to a robotic hand assembly. Particularly, the assembly comprises a housing, a plurality of finger assemblies coupled to the housing, and a thumb assembly coupled to the housing. The assembly further includes a plurality of tendons configured to control the movement of at least one of the finger assemblies or the thumb assembly, and a plurality of actuators positioned in a forearm assembly and coupled to the plurality of tendons. The forearm assembly comprises a frame that has a distal mounting portion, an intermediate mounting portion, and a proximal mounting portion. the plurality of actuators are distributed among these distal, intermediate, and proximal mounting portions. Each finger assembly comprises a knuckle assembly coupled to the housing, a proximal assembly coupled to the knuckle assembly to form a first finger joint, and a medial-distal assembly coupled to the proximal assembly to form a second finger joint.

[0014] The presently disclosed subject matter is also directed to a robotic finger assembly. Particularly, the assembly comprises a knuckle assembly configured to couple to a housing, a proximal assembly coupled to the knuckle assembly to form a first finger joint, and a medial-distal assembly coupled to the proximal assembly to form a second finger joint. The assembly further includes a plurality of tendons routed through the knuckle assembly, the proximal assembly, and the medial-distal assembly, wherein the plurality of tendons are configured to control the movement of the first finger joint and the second finger joint.

[0015] The presently disclosed subject matter is also directed to a method of controlling a robotic hand. Particularly, the method comprises receiving a control signal at a plurality of actuators positioned in a forearm assembly,

actuating one or more tendons coupled to the plurality of actuators in response to the control signal, and controlling the movement of at least one of a plurality of finger assemblies or a thumb assembly, which are coupled to a housing of the robotic hand, via the actuated tendons.

[0016] The presently disclosed subject matter is also directed to a robotic thumb assembly. Particularly, the assembly comprises a thumb knuckle assembly configured to couple to a housing, a thumb proximal assembly coupled to the thumb knuckle assembly to form a first thumb joint, and a thumb distal assembly coupled to the thumb proximal assembly to form a second thumb joint. The assembly further includes a plurality of tendons routed through the thumb knuckle assembly, the thumb proximal assembly, and the thumb distal assembly, wherein the plurality of tendons are configured to control the movement of the first thumb joint and the second thumb joint.

[0017] The presently disclosed subject matter is also directed to a robotic wrist assembly. Particularly, the assembly comprises a housing coupling component configured to couple to a palm frame of a hand assembly, a yaw component coupled to the housing coupling component, a pitch component coupled to the yaw component, and a base structure configured to couple to a forearm assembly. The assembly further includes a plurality of tendons routed through the yaw component and the pitch component, wherein the plurality of tendons are configured to control yaw and pitch movements of the hand assembly relative to the forearm assembly.

[0018] The presently disclosed subject matter is also directed to a method of routing tendons in a robotic hand assembly. Particularly, the method comprises providing a forearm assembly with a plurality of actuators, routing a plurality of tendons from the actuators through a wrist assembly, guiding the plurality of tendons through a carpal tunnel-like structure within the robotic hand assembly, and connecting each tendon to at least one of a plurality of finger assemblies or a thumb assembly that is coupled to a palm frame.

[0019] The presently disclosed subject matter is also directed to a robotic hand tendon assembly. Particularly, the assembly comprises a plurality of tendons, a plurality of actuators positioned in a forearm assembly and coupled to the plurality of tendons, a carpal tunnel-like structure configured to guide the plurality of tendons from the forearm assembly to a palm region, and a plurality of tendon routing structures configured to guide individual tendons to specific locations within a plurality of finger assemblies and a thumb assembly coupled to a palm frame.

[0020] The presently disclosed subject matter is also directed to a rotary actuator for a robotic assembly. Particularly, the actuator comprises a housing, an input shaft rotatably mounted within the housing, a single cycloidal disc coupled to the input shaft, and a stationary ring gear fixed relative to the housing and engaged with the cycloidal disc. The actuator further includes an output shaft assembly coupled to the cycloidal disc and a dynamic balancing feature configured to counteract imbalance caused by the cycloidal disc. The rotary actuator is configured to produce a torque output of at least 1 Nm within a perimeter, circumference, and/or diameter of 29 mm or less.

[0021] The presently disclosed subject matter is also directed to a method of actuating a robotic joint. Particularly, the method comprises receiving a control signal at a rotary actuator positioned in a forearm assembly of a robotic arm, and rotating an input shaft of the rotary actuator in response to the control signal. The method continues by driving a single cycloidal disc, which is coupled to the input shaft, in an orbital motion relative to a stationary ring gear, transferring rotational motion from the cycloidal disc to an output shaft assembly, and actuating a tendon coupled to the output shaft assembly to control the movement of a robotic joint.

[0022] Aspects of the disclosure relate to robotic systems, such as a robotic hand and forearm, that feature a distributed actuation system. In this system, multiple actuators are strategically mounted (e.g., four actuators each on distal, intermediate, and proximal forearm portions) and are configured to control specific movements. These movements include finger flexion/extension, finger abduction/adduction, thumb flexion/extension, thumb abduction/adduction, and wrist motion. The robotic hand typically includes multiple finger assemblies (e.g., index, middle, ring, and little fingers) and a thumb assembly, all coupled to a palm frame or an extent of the housing of the end effector. The design may feature shared actuation where, for instance, the ring and little fingers are driven by a single actuator for coupled flexion and extension. These finger and thumb assemblies are comprised of interconnected components (e.g., knuckle, proximal, and medial-distal segments) and are driven by the actuators via a tendon-based transmission system.

[0023] Efficient and precise operation is enabled by features such as a sophisticated tendon routing system. This system may include a carpal tunnel-like structure with individual external sheaths that guide each tendon to prevent pinching or tearing, alongside various integrated routing guides. Associated methods may involve actively tensioning the tendons under the control of a processor, based on feedback from various sensors. The actuators may be specialized cycloidal drives that incorporate dynamic balancing, modified gear profiles (e.g., shortened cycloids), and are constructed from high-precision, durable materials. Additionally, the system can include rotational interfaces between segments (e.g., the forearm and elbow) that feature mechanical limits (e.g., hardstops) and sensors (e.g., encoders) to provide for controlled movement and feedback regarding position and velocity.

[0024] The presently disclosed subject matter is directed to a robotic lower arm assembly. Particularly, the assembly comprises a forearm assembly including a forearm frame having a proximal mounting portion, an intermediate mounting portion, and a distal mounting portion. The assembly includes a plurality of actuators coupled to the forearm frame, wherein the plurality of actuators includes at least one direct-drive actuator and a plurality of rotary actuators, wherein each rotary actuator comprises a single cycloidal disc, a cycloidal spline fixed relative to an actuator housing, and an eccentric bearing assembly. The assembly includes a hand assembly coupled to a distal end of the forearm assembly, the hand assembly including a housing, a plurality of finger assemblies, and a thumb assembly, wherein each finger assembly includes a knuckle assembly, a proximal assembly, and a medial-distal assembly. The assembly includes a wrist assembly coupling the hand assembly to the forearm assembly, the wrist assembly including a housing coupling component, a yaw component, a pitch component, and a wrist tendon routing structure. The assembly includes a tendon assembly including a plurality of tendons, each tendon operatively connecting one of the plurality of actua-

tors to a corresponding joint in the hand assembly or the wrist assembly, wherein the hand assembly and the wrist assembly lack any actuators contained within their respective structures, and wherein each tendon is routed through the wrist tendon routing structure and a carpal tunnel-like structure in the housing of the hand assembly.

[0025] The presently disclosed subject matter is directed to a method of operating a robotic lower arm assembly. Particularly, the method comprises activating at least one of a plurality of actuators coupled to a forearm frame of a forearm assembly, wherein the plurality of actuators includes at least one direct-drive actuator and a plurality of rotary actuators, wherein each rotary actuator comprises a single cycloidal disc, a cycloidal spline fixed relative to an actuator housing, and an eccentric bearing assembly. The method includes transmitting force from the activated actuator through a tendon of a tendon assembly to a corresponding joint in a hand assembly or a wrist assembly, wherein the hand assembly and the wrist assembly may lack any actuators contained within their respective structures. The method includes moving the corresponding joint in response to the transmitted force, wherein the hand assembly includes a housing, a plurality of finger assemblies, and a thumb assembly, wherein each finger assembly includes a knuckle assembly, a proximal assembly, and a medial-distal assembly, and wherein the tendon is routed through a wrist tendon routing structure in the wrist assembly and a carpal tunnel-like structure in the housing of the end effector.

[0026] The presently disclosed subject matter is directed to a robotic hand assembly. Particularly, the assembly comprises a housing or an extent of the housing (e.g., palm frame) may define a cavity having a first interior wall extent and a second interior wall extent positioned a first distance from the first interior wall extent, and a narrowing portion of the cavity between the first and second interior wall extents, the narrowing portion having a second distance that is less than 45% of the first distance. The assembly includes a plurality of finger assemblies coupled to the housing, each finger assembly including a knuckle assembly, a proximal assembly, and a medial-distal assembly, wherein the knuckle assembly includes a knuckle support configured to couple to the housing, a knuckle enclosure coupled to the knuckle support, and at least one bearing positioned between the knuckle support and the knuckle enclosure. The assembly includes a thumb assembly coupled to the housing, the thumb assembly including a thumb knuckle assembly, a thumb proximal assembly, and a thumb distal assembly. The assembly includes a carpal tunnel-like structure coupled to the housing and positioned within the narrowing portion of the cavity, the carpal tunnel-like structure including a bottom carpal tunnel member with a plurality of bottom tendon grooves and a top carpal tunnel member with a plurality of top tendon grooves, the carpal tunnel-like structure configured to guide a plurality of tendons from a forearm assembly through the housing to the finger assemblies and the thumb assembly, wherein movement of each finger assembly and the thumb assembly is controlled by at least one tendon operatively connected to an actuator located in the forearm assembly.

[0027] The presently disclosed subject matter is directed to a method of assembling a robotic lower arm. Particularly, the method comprises coupling a plurality of actuators to a forearm frame, the forearm frame having a proximal mounting portion, an intermediate mounting portion, and a distal mounting portion, wherein the plurality of actuators includes at least one direct-drive actuator and a plurality of rotary actuators, each rotary actuator comprising a single cycloidal disc, a cycloidal spline fixed relative to an actuator housing, and an eccentric bearing assembly. The method includes connecting a hand assembly to a distal end of the forearm frame via a wrist assembly, wherein the hand assembly includes a housing, a plurality of finger assemblies, and a thumb assembly, and wherein the wrist assembly includes a housing coupling component, a yaw component, a pitch component, and a wrist tendon routing structure. The method includes routing a plurality of tendons from the plurality of actuators through the wrist tendon routing structure of the wrist assembly and into a carpal tunnel-like structure in the housing frame of the hand assembly. The method includes operatively connecting each tendon to a corresponding joint in the hand assembly or the wrist assembly, wherein the hand assembly and the wrist assembly may be further configured to lack any actuators within their respective structures.

[0028] The presently disclosed subject matter is directed to a robotic finger assembly. Particularly, the assembly comprises a knuckle assembly configured to couple to a housing, the knuckle assembly including a knuckle support, a knuckle enclosure coupled to the knuckle support, the knuckle enclosure including a top member and a bottom member, and at least one bearing positioned between the knuckle support and the knuckle enclosure. The assembly includes a proximal assembly coupled to the knuckle assembly to form a first finger joint, the proximal assembly including a proximal member having a top surface with two spaced-apart wheel wells, at least two wheels each rotatably secured within one of the wheel wells, a first slot extending between the two wheel wells, and a second slot substantially parallel to the first slot. The assembly includes a medial-distal assembly coupled to the proximal assembly to form a second finger joint, the medial-distal assembly including a medial-distal member having a coupling end portion configured to couple with the proximal assembly, a distal end portion extending from the coupling end portion at a preset angle to form a fixed third finger joint, and at least one guide slot formed in an exterior surface of the coupling end portion. The assembly includes a plurality of tendon routing structures configured to guide at least one tendon through the finger assembly, wherein the at least one tendon is operatively connected to an actuator located in a forearm assembly and configured to control movement of the first finger joint and the second finger joint, and wherein the at least one tendon includes a first tendon routed through the first slot for controlling flexion of the first finger joint and a second tendon routed through the second slot for controlling extension of the first finger joint.

[0029] The presently disclosed subject matter is directed to a method of controlling a robotic hand. Particularly, the method comprises receiving a control signal at an actuator located in a forearm assembly, wherein the actuator is a rotary actuator comprising a single cycloidal disc, a cycloidal spline fixed relative to an actuator housing, and an eccentric bearing assembly. The method includes rotating an output shaft of the actuator in response to the control signal. The method includes applying tension to a tendon operatively connected to the output shaft. The method includes transmitting the tension through the tendon to a joint in a finger assembly or a thumb assembly of a hand assembly.

The method includes moving the joint in response to the transmitted tension, wherein the hand assembly lacks any actuators contained within its structure, and wherein the tendon is routed through a wrist tendon routing structure in a wrist assembly and a carpal tunnel-like structure in a palm region of the hand assembly.

[0030] The presently disclosed subject matter is directed to a robotic thumb assembly. Particularly, the assembly comprises a thumb knuckle assembly configured to couple to a palm frame of the housing, the thumb knuckle assembly including a first spool and a second spool arranged perpendicular to each other, a housing structure configured to couple the first and second spools, and a thumb support configured to couple to the palm frame. The assembly includes a thumb proximal assembly coupled to the thumb knuckle assembly to form a first thumb joint, the thumb proximal assembly including a proximal thumb member having a top surface with two spaced-apart wheel wells, at least two wheels each rotatably secured within one of the wheel wells, a first slot extending between the two wheel wells, and a second slot substantially parallel to the first slot. The assembly includes a thumb distal assembly coupled to the thumb proximal assembly to form a second thumb joint. The assembly includes a plurality of tendon routing structures configured to guide at least one tendon through the thumb assembly, wherein the at least one tendon is operatively connected to an actuator located in a forearm assembly and configured to control movement of the first thumb joint and the second thumb joint, and wherein the first spool forms a portion of a trapeziometacarpal (TM) joint and the second spool forms a portion of a carpometacarpal (CMC) joint.

[0031] The presently disclosed subject matter is directed to a wrist assembly for a robotic arm. Particularly, the assembly comprises a housing coupling component configured to attach to a palm frame of a hand assembly, the housing coupling component including a base member formed to define tendon guides. The assembly includes a yaw component coupled to the housing coupling component and configured to enable side-to-side movement of the hand assembly, the yaw component including pegs that mate with bearings coupled to the base member of the housing coupling component, the pegs extending from a base structure along a yaw axis. The assembly includes a pitch component coupled to the housing coupling component and configured to enable up-and-down movement of the hand assembly, the pitch component including pegs that mate with bearings coupled to a wrist mount of the palm frame, the pegs extending from the base member of the housing coupling component along a pitch axis. The assembly includes a base structure configured to couple to a forearm assembly. The assembly includes a wrist tendon routing structure coupled to the base structure and configured to guide a plurality of tendons from the forearm assembly to the hand assembly, the wrist tendon routing structure including a routing plate with guide channels and a plurality of bushing sub-assemblies, wherein movement of the yaw component and the pitch component is controlled by tendons operatively connected to actuators located in the forearm assembly.

[0032] The presently disclosed subject matter is directed to a robotic forearm frame. Particularly, the frame comprises a wrist end portion configured to couple to a wrist assembly. The frame includes a distal mounting portion extending from the wrist end portion and configured to house a first set of actuators, the distal mounting portion including actuator mounts for securing the first set of actuators. The frame includes an intermediate mounting portion extending from the distal mounting portion and configured to house a second set of actuators, the intermediate mounting portion including actuator mounts for securing the second set of actuators. The frame includes a proximal mounting portion extending from the intermediate mounting portion and configured to house a third set of actuators, the proximal mounting portion including actuator mounts for securing the third set of actuators. The frame includes an elbow end portion configured to couple to an elbow assembly, the elbow end portion including an interior portion and a threaded exterior portion, wherein the forearm frame has a tapered design with a perimeter, circumference, and/or diameter that decreases from the proximal mounting portion to the distal mounting portion, and wherein the perimeter, circumference, and/or diameter of the proximal mounting portion is between 1.2 and 1.5 times the perimeter, circumference, and/or diameter of the distal mounting portion.

[0033] The presently disclosed subject matter is directed to a method of routing tendons in a robotic lower arm assembly. Particularly, the method comprises securing a plurality of actuators within a forearm frame, wherein the plurality of actuators includes at least one direct-drive actuator and a plurality of rotary actuators, each rotary actuator comprising a single cycloidal disc, a cycloidal spline fixed relative to an actuator housing, and an eccentric bearing assembly. The method includes routing a plurality of tendons from the actuators through a wrist assembly, wherein routing the plurality of tendons through the wrist assembly comprises guiding each tendon through a routing plate in a wrist tendon routing structure and directing each tendon around one of a plurality of bushing sub-assemblies coupled to the routing plate. The method includes guiding the plurality of tendons through a carpal tunnel-like structure in a palm frame of a hand assembly, wherein guiding the plurality of tendons through the carpal tunnel-like structure comprises positioning tendon sheaths between a bottom carpal tunnel member and a top carpal tunnel member and fastening the bottom and top carpal tunnel members together. The method includes connecting each tendon to a corresponding joint in a finger assembly or a thumb assembly of the hand assembly, wherein the routing of the tendons enables control of the hand assembly and the wrist assembly without actuators located within the hand assembly or the wrist assembly.

[0034] Disclosed herein are embodiments for a sophisticated robotic hand and forearm assembly. The system utilizes a plurality of actuators housed within a forearm frame to control the movement of a multi-jointed hand assembly through a complex tendon system. In some embodiments, the forearm frame includes proximal, intermediate, and distal mounting portions, housing a specific arrangement of rotary actuators of two different sizes and at least one direct-drive actuator for wrist twist. The first, larger-sized rotary actuators are configured for higher torque applications, while the second, smaller-sized actuators, between 60% and 80% of the first size, handle lower torque requirements. A representative configuration places four large actuators in the proximal portion, one large and three small actuators in the intermediate portion, and four small actuators in the distal portion. These rotary actuators, featuring a single cycloidal disc and a fixed cycloidal spline, achieve a

gear reduction ratio between 30:1 and 50:1. Each actuator drives a continuous loop tendon that extends to a specific joint in the finger or thumb assembly and back to the actuator's spool.

[0035] The routing of this multitude of tendons from the forearm to the hand is achieved through a specialized wrist assembly that provides pitch and yaw movements, each with a substantial angular range of motion. The wrist tendon routing structure within this assembly features a routing plate with guide channels and a series of bushing sub-assemblies. Each sub-assembly is equipped with exactly two pulleys on a dowel, each pulley designed to change a tendon's direction by approximately 90 degrees. A clamp assembly with corresponding guide channels is secured over the routing plate to maintain the tendons' positions. From the wrist, the tendons pass through a novel carpal tunnel-like structure situated in a narrowing portion of a cavity within the palm frame. This structure is composed of a top and a bottom member with corresponding grooves that clamp around individual tendon sheaths, each having a perimeter, circumference, and/or diameter between 1.5 mm and 3 mm, ensuring smooth and organized tendon movement into the digits. This narrowing portion of the palm cavity has a width that is between 30% and 45% of the cavity's upper width.

[0036] The hand assembly itself exhibits a high degree of dexterity with nine degrees of freedom, complemented by two degrees of freedom in the wrist (pitch and yaw) and one in the forearm (wrist twist). The finger and thumb assemblies incorporate detailed joint mechanisms. For instance, the thumb's functionality is enabled by a knuckle assembly with perpendicular spools for abduction/adduction and flexion/extension, corresponding to the trapeziometacarpal (TM) and carpometacarpal (CMC) joints. The proximal thumb member includes two wheels and distinct slots with ball recesses for securing the tendons that control the CMC joint's flexion and extension. A similar design with two wheels and tendon slots is found in the proximal members of the fingers. The finger assemblies also feature knuckle joints providing two degrees of freedom (flexion/extension and abduction/adduction) and a medial-distal assembly with a fixed third finger joint. Notably, a finger coupler mechanism within the palm links the movement of the ring and little fingers, providing a single degree of freedom for their combined motion.

BRIEF DESCRIPTION OF THE DRAWINGS

[0037] The drawing figures depict one or more implementations in accord with the present teachings, by way of example only, not by way of limitation. In the figures, like reference numerals refer to the same or similar elements.

[0038] FIG. **1** is a perspective view of a humanoid robot in an upright, neutral position P**1** and including: (i) an upper region having: (a) a head and neck assembly, (b) a torso, (c) left and right shoulders, (d) left and right upper arm assemblies that each include an upper humerus, a lower humerus, and an upper forearm, and (e) left and right lower arm assemblies that each include a lower forearm, a wrist, and a hand assembly, (ii) a lower region having: (a) left and right shins, (b) left and right ankle assemblies, and (e) left and right feet; and (iii) a central region connecting the upper and lower regions, and having (a) a spine, (b) a pelvis, (c) left and right hips, (d) left and right upper thighs, and (e) left and right lower thighs;

[0039] FIG. **2** is a perspective view of another embodiment of a humanoid robot;

[0040] FIG. **3** is a perspective view of the left lower arm assembly of the robot of FIG. **1** or FIG. **2**, showing that the left lower arm assembly includes: (i) a hand assembly, (ii) a wrist assembly, (iii) an elbow assembly, (iv) a tendon assembly, and (v) a forearm assembly shown without its housing to reveal: (a) a forearm frame with a distal mounting portion, an intermediate mounting portion, and a proximal mounting portion, (b) four H2 actuators contained in the distal mounting portion of the forearm frame, (c) three H2 actuators and one H1 actuator contained in the intermediate mounting portion of the forearm frame, and (d) four H1-sized actuators contained in the proximal mounting portion of the forearm frame;

[0041] FIG. **4** is a perspective view of the forearm frame included in the forearm assembly of the lower arm assembly of FIG. **3**, wherein the forearm frame includes: (i) a distal mounting portion, (ii) an intermediate mounting portion, (iii) a proximal mounting portion, (iv) a wrist end portion, and (v) an elbow end portion;

[0042] FIG. **5** is a perspective view of an actuator contained within the forearm assembly of the lower arm assembly of FIG. **3**, wherein the actuator of the forearm may be a first size (H1) or a second size (H2);

[0043] FIG. **6** is a side view of the actuator of FIG. **5**;

[0044] FIG. **7** is a front view of the actuator of FIG. **5**;

[0045] FIG. **8** is cross-sectional view of the actuator of FIG. **5**;

[0046] FIG. **9** is a perspective view of the tendon coupled to the actuator of FIG. **8**, showing tendons coupled to, wound around a spool, and routed through first and second pulleys on each side of said actuator;

[0047] FIG. **10** is a perspective view of the end effector or hand assembly of the robot of FIG. **1** or FIG. **2**, which comprises: (i) at least one finger assembly (e.g., index, middle, ring, and little), (ii) a thumb assembly, (iii) a palm assembly including a housing with an omitted bottom cover, and (iv) a plurality of tendons and their associated tendon sheaths, shown with top views of the finger and thumb assemblies detached from the hand assembly;

[0048] FIG. **11**A-**11**B are an exploded view of one of the finger assemblies included in the hand assembly of the robot of FIG. **1** or FIG. **2**, showing the finger assembly includes: (i) a knuckle assembly having (a) a knuckle support, (b) a spacer, (c) a knuckle enclosure, (d) bearings, and (e) pins, (ii) a proximal assembly having (a) a proximal member, (b) spanning covers, and (c) a proximal housing, and (iii) a medial-distal assembly having (a) a medial-distal member, (b) a distal housing, and (c) a finger tip cover;

[0049] FIG. **12** is a perspective view of the finger assembly of FIG. **11** in an uncurled state;

[0050] FIG. **13** is a side view of the finger assembly of FIG. **11** in the uncurled state;

[0051] FIG. **14** is a first partially assembled view of the finger assembly of FIG. **11**, wherein the knuckle support is coupled to a palm frame, and a tendon is routed through the cable passageways of the knuckle support and includes a ball to be received in the knuckle enclosure;

[0052] FIG. **15** is a second partially assembled view of the finger assembly of FIG. **14**, where the ball on the tendon is aligned with the ball seat of a top member of the knuckle enclosure;

[0053] FIG. **16** is a third partially assembled view of the finger assembly, wherein a spacer and the proximal member are added to the assembly of FIG. **15**;

[0054] FIG. **17** is a fourth partially assembled view of the finger assembly, wherein the bottom member of the knuckle enclosure is added to the assembly of FIG. **16**;

[0055] FIG. **18** is a fifth partially assembled view of the finger assembly, wherein a bearing is coupled to the assembly of FIG. **17**;

[0056] FIG. **19** is a sixth partially assembled view of the finger assembly, wherein a clasp is coupled to the knuckle enclosure of FIG. **18**;

[0057] FIG. **20** is a seventh partially assembled view of the finger assembly, wherein a medial-distal member is coupled to the proximal member on a first side via a first spanning cover and a pair of bearings;

[0058] FIG. **21** is an eighth partially assembled view of the finger assembly, wherein a second and opposed spanning cover is coupled to the proximal and the medial-distal members;

[0059] FIG. **22** is a ninth partially assembled view of the finger assembly, wherein wheels are secured within the proximal member via pins that are inserted in slots formed in said proximal member;

[0060] FIG. **23** is a tenth partially assembled view of the finger assembly, wherein an MCP flexion tendon is routed through cable guide slots on the exterior of the bottom member;

[0061] FIG. **24** is an eleventh partially assembled view of the finger assembly, wherein a ball is coupled to the MCP flexion tendon;

[0062] FIG. **25** is a twelfth partially assembled view of the finger assembly, wherein the ball of an MCP extension tendon is positioned within a ball recess of the knuckle assembly;

[0063] FIG. **26** is a thirteenth partially assembled view of the finger assembly, wherein a ball is coupled to the PIP flexion tendon and inserted within the second ball seat, and the tendon is routed into the bottom guide slot of said medial-distal member;

[0064] FIG. **27** is a fourteenth partially assembled view of the finger assembly, wherein said PIP flexion tendon is routed over the wheels of the proximal member;

[0065] FIG. **28** is a fifteenth partially assembled view of the finger assembly, wherein said PIP flexion tendon is inserted into a second cable guide slot;

[0066] FIG. **29** is a sixteenth partially assembled view of the finger assembly, wherein a PIP extension tendon is inserted into an opening formed in the medial-distal member;

[0067] FIG. **30** is an end view of the index, middle, ring, and little finger assemblies included in the end effector or hand assembly of FIG. **10**, showing the tendon passageways;

[0068] FIG. **31** is an exploded view of the thumb assembly included in the hand assembly of the robot of FIG. **1** or FIG. **2**, showing the thumb assembly includes: (i) a knuckle assembly having (a) a thumb knuckle member with spools and a housing structure configured to couple the spools together and (b) a thumb support, (ii) a proximal assembly having (a) a proximal thumb member, (b) thumb spanning covers, and (c) a proximal thumb housing, and (iii) a distal assembly having (a) a distal thumb member, (b) a distal housing, and (c) a thumb tip cover;

[0069] FIG. **32** is a perspective view of the thumb assembly of FIG. **31** in an uncurled state;

[0070] FIG. **33** is an end view of the thumb assembly of FIG. **31**, showing the tendon passageways;

[0071] FIG. **34** is a perspective view of the end effector or hand assembly of FIG. **10**, showing tendon sheaths arranged within a carpal tunnel-like structure included in the palm assembly of the hand assembly;

[0072] FIG. **35** is a bottom or palm view of a portion of the end effector or hand assembly of FIG. **34**;

[0073] FIG. **36** is a first perspective view of the wrist assembly coupled to the end effector or hand assembly of FIG. **10**, showing the wrist assembly includes: (i) at least a housing coupling component, (ii) a yaw component, (iii) a pitch component, (iv) a base structure, and (v) a wrist tendon routing structure;

[0074] FIG. **37** is a second perspective view of a portion of the wrist assembly of FIG. **36**, showing the housing coupling component includes: (i) a base member, (ii) a cover member coupled to the base member over tendon guides formed on the base member, and (iii) fasteners that extend through the cover member into the base member;

[0075] FIG. **38** is a third perspective view of a portion of the wrist assembly of FIG. **36**, showing tendons routed through the tendon guides of the housing coupling component;

[0076] FIG. **39** is a first view of the wrist tendon routing structure included in the wrist assembly of FIG. **36**, showing the wrist tendon routing structure includes a routing plate formed with guide channels for the tendons routed therethrough and bushing sub-assemblies coupled to the routing plate;

[0077] FIG. **40** is a cross-sectional view of the wrist tendon routing structure taken along line **40-40** of FIG. **39**;

[0078] FIG. **41** is a second view of the wrist tendon routing structure of FIG. **39**, showing the guide channels for the tendons routed therethrough;

[0079] FIG. **42** is a perspective view of the wrist assembly of FIG. **36**, showing the wrist tendon routing structure further includes a clamp assembly that couples to the routing plate over the tendons;

[0080] FIG. **43** is an end view of the end effector or hand assembly of FIG. **10**, showing the carpal tunnel-like structure of the palm;

[0081] FIG. **44**A-**44**B is a bottom or palm view of the left lower arm assembly of FIG. **3** without the forearm housing of the forearm assembly;

[0082] FIG. **45**A is a cross-sectional view of the left lower arm assembly taken along line **45-45** of FIG. **44**;

[0083] FIG. **45**B is a zoomed in view of an extent of the left lower arm assembly of FIG. **44**;

[0084] FIG. **46** is a zoomed in view of the actuators in the distal mounting portion of FIG. **45**B;

[0085] FIG. **47** is a side view of the finger assembly of FIG. **12** in the uncurled state;

[0086] FIG. **48** is a cross-sectional view of the finger assembly taken along line **48-48** of FIG. **47**;

[0087] FIG. **49** is a cross-sectional view of the finger assembly taken along line **49-49** of FIG. **47** and showing the omission of a spacer that prevents adduction and abduction;

[0088] FIG. **50** is a bottom view of the finger assembly of FIG. **47** in an adducted state, wherein said finger assembly moved in a first direction at the first or MCP joint;

[0089] FIG. **51** is a bottom view of the finger assembly of FIG. **47** in a central and uncurled state;

[0090] FIG. **52** is a bottom view of the finger assembly of FIG. **47** in an abduction state, wherein said finger assembly moved in a second direction at the first or MCP joint

[0091] FIG. **53** is a bottom view of the finger assembly of FIG. **47** in a central and uncurled state;

[0092] FIG. **54** is a cross-sectional view of the finger assembly taken along line **54-54** of FIG. **53** and showing the PIP extension tendon (blue) along with the MCP flexion tendon (red);

[0093] FIG. **55** is a cross-sectional view of the finger assembly taken along line **55-55** of FIG. **53** and showing the MCP extension tendon (blue) along with the PIP flexion tendon (red);

[0094] FIG. **56** is a top view of the finger assembly of FIG. **53**, wherein said finger assembly is curled towards the palm at the first or MCP joint and is in a partially flexed position;

[0095] FIG. **57** is a cross-sectional view of the index finger assembly taken along line **57-57** of FIG. **56** and showing the MCP extension tendon (blue) along with the PIP flexion tendon (red);

[0096] FIG. **58** is a cross-sectional view of the index finger assembly taken along line **58-58** of FIG. **56** and showing the PIP extension tendon (blue) along with the MCP flexion tendon (red);

[0097] FIG. **59** is a rear view of the finger assembly of FIG. **56**, wherein said finger assembly is curled towards the palm at the first or MCP joint and is in a fully flexed position;

[0098] FIG. **60** is a cross-sectional view of the finger assembly along line **60-60** of FIG. **59** and showing the PIP extension tendon (blue) along with the MCP flexion tendon (red);

[0099] FIG. **61** is a cross-sectional view of the finger assembly along line **61-61** of FIG. **59** and showing the MCP extension tendon (blue) along with the PIP flexion tendon (red);

[0100] FIG. **62** is a top view of the finger assembly of FIG. **59**, wherein said finger assembly is curled towards the palm at the second or PIP joint and is in a fully flexed position;

[0101] FIG. **63** is a cross-sectional view of the finger assembly along line **63-63** of FIG. **62** and showing the PIP flexion tendon (red) along with the MCP extension tendon (blue);

[0102] FIG. **64** is a cross-sectional view of the finger assembly along line **64-64** of FIG. **62** and showing a PIP extension tendon (blue) along with the MCP flexion tendon (red);

[0103] FIG. **65** is a rear view of the finger assembly of FIG. **62**, wherein said finger assembly is in a fully curled state, wherein the finger assembly is curled towards the palm at the first or MCP joint and the second or PIP joint;

[0104] FIG. **66**A is a cross-sectional view of the finger assembly along line **66-66** of FIG. **65** and showing the PIP flexion tendon (red) along with the MCP extension tendon (blue);

[0105] FIG. **66**B is a cross-sectional view of the finger assembly along line **67-67** of FIG. **65** and showing the PIP extension tendon (blue) along with the MCP flexion tendon (red);

[0106] FIG. **67**A is an isolated view of the PIP extension tendon (blue) and the MCP flexion tendon (red) of FIG. **54** and showing the total curvature associated with said tendons when the finger assembly is in the uncurled state;

[0107] FIG. **67**B is an isolated view of the MCP extension tendon (blue) along with the PIP flexion tendon (red) of FIG. **55** and showing the total curvature associated with said tendons when the finger assembly is in the uncurled state;

[0108] FIG. **67**C is an isolated view of the PIP extension tendon (blue) and the MCP flexion tendon (red) of FIG. **66**B and showing the total curvature associated with said tendons when the finger assembly is in the fully curled state;

[0109] FIG. **67**D is an isolated view of the MCP extension tendon (blue) along with the PIP flexion tendon (red) of FIG. **66**A and showing the total curvature associated with said tendons when the finger assembly is in the fully curled state;

[0110] FIG. **68** is a bottom view of the thumb assembly of FIG. **32**, wherein said thumb assembly is curled towards the palm at the second or CMC joint in a partially flexed position;

[0111] FIG. **69** is a cross-sectional view of the thumb assembly taken along line **69-69** of FIG. **68** and showing a CMC flexion tendon (red) along with the MCP extension tendon (blue);

[0112] FIG. **70** is a cross-sectional view of the thumb assembly taken along line **70-70** of FIG. **68** and showing a CMC extension tendon (blue) along with the MCP flexion tendon (red);

[0113] FIG. **71** is a bottom view of the thumb assembly of FIG. **68**, wherein said thumb assembly is curled towards the palm at the second or CMC joint in a fully flexed position;

[0114] FIG. **72** is a cross-sectional view of the thumb assembly taken along line **72-72** of FIG. **71** and showing a CMC flexion tendon (red) along with the MCP extension tendon (blue);

[0115] FIG. **73** is a cross-sectional view of the thumb assembly taken along line **73-73** of FIG. **71** and showing a CMC extension tendon (blue) along with the MCP flexion tendon (red);

[0116] FIG. **74** is a side view of the thumb assembly of FIG. **71**;

[0117] FIG. **75** is a bottom view of the thumb assembly of FIG. **71**;

[0118] FIG. **76** is a cross-sectional view of the thumb assembly taken along line **76-76** of FIG. **74**;

[0119] FIG. **77** is a cross-sectional view of the thumb assembly taken along line **77-77** of FIG. **75**;

[0120] FIG. **78** is a cross-sectional view of the thumb assembly taken along line **78-78** of FIG. **75**;

[0121] FIG. **79** is a side view of the thumb assembly of FIG. **74**, wherein said thumb assembly is rotated towards the palm at the first or TM joint in a fully abducted position;

[0122] FIG. **80** is a cross-sectional view of the thumb assembly taken along line **80-80** of FIG. **79** and showing a TM abduction tendon (red) and a TM adduction tendon (blue);

[0123] FIG. **81** is a bottom view of the thumb assembly of FIG. **79**, wherein said thumb assembly is rotated towards the palm at the first or TM joint in a fully abducted position;

[0124] FIG. **82** is an end view of the thumb assembly of FIG. **81**;

[0125] FIG. **83** is a cross-sectional view of the thumb assembly taken along line **83-83** of FIG. **82** and showing a TM abduction tendon (red) and a TM adduction tendon (blue);

[0126] FIG. **84** is a bottom or palm view of the end effector or hand assembly of FIG. **34**, wherein the wrist assembly has been omitted;

[0127] FIG. **85** is a zoomed in view of a portion of the end effector or hand assembly of FIG. **84**;

[0128] FIG. **86** is a cross-sectional view of the end effector or hand assembly taken along line **86-86** of FIG. **84**;

[0129] FIG. **87** is a bottom or palm perspective view of: (i) the ring and little finger assembly and (ii) a finger coupler of the palm assembly included in the end effector or hand assembly of FIG. **34**;

[0130] FIG. **88** is a perspective view of a portion of the wrist assembly included in the left lower arm assembly of FIG. **3**, showing a step associated with the routing of a tendon in connection with the wrist assembly;

[0131] FIG. **89** is a perspective view of a portion of the wrist assembly of FIG. **88**, showing another step associated with the routing of a tendon in connection with the wrist assembly;

[0132] FIG. **90** is a bottom or palm view of the hand assembly attached at the wrist assembly included in the left lower arm assembly of FIG. **3**, wherein said hand assembly is in a maximum yaw position;

[0133] FIG. **91** is a bottom or palm view of the hand assembly attached at the wrist assembly of FIG. **90**, wherein said hand assembly is in a minimum yaw position;

[0134] FIG. **92** is a side view of the hand assembly attached at the wrist assembly included in the left lower arm assembly of FIG. **3**, wherein said hand assembly is in a minimum pitch position;

[0135] FIG. **93** is a side view of the hand assembly attached at the wrist assembly of FIG. **92**, wherein said hand assembly is in a maximum pitch position;

[0136] FIG. **94** is a perspective view of the elbow assembly included in the left lower arm assembly of FIG. **3**;

[0137] FIG. **95** is a partially assembled view of the left lower arm assembly of FIG. **3**, wherein the wrist twist actuator is being coupled to the proximal mounting portion of the forearm frame;

[0138] FIG. **96** is a front view of the hand assembly attached at the wrist assembly included in the left lower arm assembly of FIG. **3**, wherein said hand assembly is in a minimum counter-clockwise twist position; and

[0139] FIG. **97** is a front view of the hand assembly attached at the wrist assembly of FIG. **96**, wherein said hand assembly is in a maximum counter-clockwise twist position.

DETAILED DESCRIPTION

[0140] In the following detailed description, numerous specific details are set forth by way of examples in order to provide a thorough understanding of the relevant teachings. However, it should be apparent to those skilled in the art that the present teachings may be practiced without such specific details. In other instances, well-known methods, procedures, components, and circuitry have been described at a relatively high level, without extensive detail, in order to avoid unnecessarily obscuring aspects of the present disclosure.

[0141] While this disclosure includes several embodiments in many different forms, there is shown in the drawings and will herein be described in detail specific embodiments with the understanding that the present disclosure is to be considered as an exemplification of the principles of the disclosed methods and systems, and is not intended to limit the broad aspects of the disclosed concepts to the embodiments illustrated. As will be realized, the disclosed methods and systems are capable of other and different configurations, and several of their details are capable of being modified in various respects, all without departing from the scope of the disclosed methods and systems. For example, one or more of the following embodiments, in part or in whole, may be combined in a manner consistent with the disclosed methods and systems. As such, one or more steps from the flow charts or components in the Figures may be selectively omitted or combined, consistent with the principles of the disclosed methods and systems. Additionally, one or more steps from the flow charts or the method of assembling the shoulder and upper arm may be performed in a different order than presented. Accordingly, the drawings, flow charts, and detailed description are to be regarded as illustrative in nature, and not as restrictive or limiting.

A. Introduction

[0142] General-purpose humanoid robots are designed to emulate human form and functionality, typically featuring two legs, two arms, and a face-like screen. With the general-purpose humanoid robot's emulation of the human body, there arises the necessity for an arm assembly that can closely replicate human movements, and capabilities. The need for the arm assembly to be capable of mimicking human structure and function extends far beyond cosmetic resemblance. For example, it is required that the arm assembly enables the end effector or hand assembly of the robot to seamlessly interact with and physically manipulate diverse objects in complex environments, all while performing in a durable, cost-effective, and controllable manner using the robot's limited resources, including its onboard battery power. Enabling such a robot system to meet these requirements, along with being able to execute general human tasks, poses a significant challenge due to the vast array of potential positions, locations, and states that said robot could occupy at any given time in a dynamic environment. The multitude of these permutations can be minimized by training the robot system through various established methodologies, such as: (i) imitation learning or teleoperation, (ii) supervised learning, (iii) unsupervised learning, (iv) reinforcement learning, (v) inverse reinforcement learning, (vi) regression techniques, or (vii) other similar methods. To further streamline the vast array of possible positions, locations, and states, reduce manufacturing steps, complexities, and costs, minimize the number of components within the robot system, enhance component modularity, reduce training time, and achieve several other advantages that would be apparent to those skilled in the art, two or more components of the end effector can be either: (i) linked, or (ii) fused to one another. When two or more components are linked or fused, the movement of one component results in a corresponding movement in another component and in such case the end effector or the component of the end effector can be considered underactuated. In particular, the disclosed end effector or hand assembly: (i) links the movement of the ring finger to the movement of the little finger, and (ii) fuses the distal portion of each finger with the medial portion of that same finger. This design provides substantial advantages over conventional end effectors that lack this specific configuration.

[0143] In addition to linking and fusing components, the disclosed lower arm assembly includes a plurality of actuators that are positioned within the forearm and are designed to control the operation of the end effector or hand assembly. To this extent, the hand assembly and the wrist assembly are

designed to lack any actuators contained within their respective structures. To enable the actuators positioned in the forearm to control the movement of the hand assembly, the actuators are coupled to extents or portions of the hand assembly using flexible cables, also referred to as tendons. To facilitate this coupling, the lower arm assembly utilizes a unique tendon assembly. Said tendon assembly routes the tendons through a carpal tunnel-like structure in a tightly formed bundle. Within this area, each tendon is routed through an external sheath to enable smooth movement of the tendon without pinching, tearing, or otherwise harming the tendons. This unique design provides substantial benefits over conventional robotic hands and their associated structures because it enables: (i) the end effector to have a smaller footprint (e.g., a smaller and slimmer profile), and (ii) the inclusion of additional degrees of freedom (DoF) that are not possible or would be difficult to achieve using a direct-actuation configuration.

[0144] To facilitate the positioning of the actuators within the forearm, said forearm includes a frame that has three primary mounting portions. Each mounting portion is designed to accommodate four actuators, wherein the first or distal mounting portion is designed to house the actuators that control portions of each finger, the second or intermediate mounting portion is designed to house actuators that control portions of the wrist, thumb, and index finger, and the third or proximal mounting portion is designed to house actuators that control the thumb and wrist. The frame has a tapered design to enable a portion positioned adjacent, substantially adjacent, proximate, or near the wrist to have an end effector, wrist, distal, or second perimeter, circumference and/or diameter that is smaller than elbow, forearm, proximate, or first perimeter of a portion positioned adjacent, substantially adjacent, proximate, or near the elbow. In other words, the perimeter, circumference, and/or diameter of the frame at a point in the third or proximal mounting portion is greater than the perimeter, circumference and/or diameter at a point in the first or distal mounting portion. This tapered design or reduction in the perimeter, circumference and/or diameter of the frame: (i) enables said frame to appear more human-like, (ii) allows the hand assembly to fit into smaller spaces, and (iii) reduces the mass that is positioned at the distal end of the arm. The diameter of the forearm at its widest point is preferably significantly less than 100 mm and more preferably less than 70 mm.

[0145] The end effector or hand assembly includes: (i) a thumb, and (ii) a plurality of finger assemblies-namely an index finger, a middle finger, a ring finger, and a little finger. Each of the finger assemblies has the same or similar structure as all other finger assemblies, with the potential exception of the omission of a spacer component in the index finger. In a preferred embodiment, the finger assemblies are designed to be substantially interchangeable with one another. The use of identical or nearly identical structures for the finger assemblies is beneficial because it reduces the number of distinct components required, increases modularity, and reduces the overall cost of the hand assembly and the robot system. While said finger assemblies are preferably structurally the same, the tips or ends of the distal portion of each finger are not positioned within a single plane. In other words, the tips or ends of the distal portions are intentionally offset from one another. This configuration is achieved by staggering the location where each finger assembly is coupled to the housing of the hand assembly. In particular, the middle finger is coupled to the housing in a position that is furthest away from the wrist, and the little finger is coupled to the housing in a position that is closest to the wrist. This enables the hand assembly to (i) appear more human-like, and (ii) increase fine manipulation of objects. Additionally, each finger is preferably fixed in at least one direction to the housing. In other words, the fingers are preferably not configured to rotate around a longitudinal axis of the finger.

[0146] Unlike conventional end effectors or hands, the disclosed lower arm assembly includes 12 degrees of freedom (DoF). In particular, the hand assembly includes 9 DoF, the wrist assembly includes 2 DoF, and the forearm includes 1 DoF for wrist twist. Extracting the hand assembly orientation or wrist twist DoF from the total, the combination of the wrist and hand assemblies includes 11 DoF. These 11 DoF can be broken down as follows: (i) the index finger includes 3 DoF, (ii) the middle finger includes 2 DoF, (iii) the combined ring and little fingers have a total of 1 DoF, (iv) the thumb includes 3 DoF, (v) wrist pitch includes 1 DoF, and (vi) wrist yaw includes 1 DoF. The 9 DoF contained in the hand assembly are controlled by the above-described nine tendon-based actuators that are positioned within the forearm, not the hand or wrist. It should be understood that alternative embodiments that are discussed below focus on an end effector the includes more than 19 degrees of freedom, but less than 24 degrees of freedom. Meanwhile, said end effector includes more than six motors, but fewer than 20 motors.

[0147] Unlike conventional end effectors or hands, each degree of freedom contained in the hand assembly is actively driven by an actuator in both directions of movement. In other words, the hand assembly does not include springs or other passive biasing members that force a joint into a specific orientation (e.g., open or closed). Instead, the disclosed hand assembly utilizes an actuator to extend a structure (e.g., proximal extent of a finger) around a joint, rotational axis, or pivot point and uses the same or another actuator to retract the structure (e.g., proximal extent of a finger) around said joint, rotational axis, or pivot point. Additionally, the disclosed assemblies feature two joints of the thumb that are controlled by a rotary actuator of a first, larger size (H1), while all other joints of the hand assembly (e.g., fingers and one joint of the thumb) are controlled by a rotary actuator of a second, smaller size (H2). Using different sized actuators provides a substantial benefit over conventional lower arm assemblies that lack this feature because it: (i) reduces the overall power consumption of the lower arm assembly, (ii) provides the necessary torques to the specific components that require it, without providing unnecessary additional torque to components that do not need it, and (iii) enables the forearm to have the aforementioned tapered configuration.

[0148] Unlike the hand assembly and wrist joints, the hand orientation or wrist twist is controlled by a direct-drive actuator that is positioned in a proximal end portion of the forearm. Thus, the lower arm assembly includes at least one direct-drive actuator along with eleven tendon-driving actuators. While the preceding paragraphs describe multiple benefits, desired configurations, and unique aspects of the lower arm assembly disclosed in the figures of this Application, it should be understood that these benefits, configurations, and aspects are only exemplary. They may not apply to all embodiments disclosed in or contemplated by this

Application, or that can be derived by one of skill in the art based on the disclosure contained in this Application. In other words, the benefits, desired configurations, and unique aspects are not limiting in any manner.

B. Robot

[0149] Referring to FIGS. **1-2**, a humanoid robot **1**, **1001** may include the following systems, assemblies, components, and parts: (i) an upper region including a head and neck assembly **10**, **1010**, a torso **16**, **1016**, left and right arms **5**, **1005**, and left and right hand assemblies **200**; (ii) a central region including a spine **60**, **1060**, a pelvis **64**, **1064**, and left and right upper leg assemblies, where each upper leg includes a hip **70**, **1070** and an upper thigh **76**, **1076**, and a lower thigh **80**, **1080**; and (iii) a lower region including left and right lower leg assemblies, where each lower leg including a shin **84**, **1084**, an ankle or talus assembly **88**, **1088**, and feet **92**, **1092**.

[0150] As shown in FIGS. **1** and **2**, each arm **5**, **1005** may be subdivided into an upper arm assembly **24**, **1024** and a lower arm assembly **28**, **1028**. The upper arm assembly **24**, **1024** includes the shoulder **26**, **1026**, the upper humerus **30**, **1030**, and the lower humerus **36**, **1036**. The lower arm assembly **28**, **1028**, which extends from the elbow to the fingertips, generally includes an upper forearm **40**, **1040**, a lower forearm **46**, **1046**, a wrist **550**, **1550**, and an end effector or hand assembly **200**. The end effector or hand assembly **200** is coupled to the wrist **550**, **1550** of the lower arm assembly **28**, **1028** and is therefore considered an integral part of the lower arm assembly **28**, **1028**. A more detailed discussion of the constituent sub-assemblies of the lower arm assembly **28**, **1028**, along with their alterations and combinations.

[0151] The robot **1**, **1001** includes various actuators arranged within its structure to closely replicate human movements and capabilities. In the illustrative embodiment, the left and right arms **5**, **1005** extend from the torso **16**, **1016** of the robot **1**, **1001**, and the left and right legs **6**, **1006** extend from the pelvis **64**, **1064** of the robot **1**, **1001**. The actuators in the upper arm assembly include: (i) a shoulder actuator **280** (J**2**) configured to move the arm **5**, **1005** relative to the robot's torso **16**, **1016**, (ii) an upper arm twist actuator **320** (J**3**) configured to rotate the portion of the arm **5**, **1005** below the upper humerus **30**, **1030** relative to upper humerus **30**, **1030**, and (iii) an elbow actuator **374** (J**4**) configured to bend the elbow of the arm **5**, **1005** of the robot **1**, **1001**. The lower arm assembly actuators include: (i) a first group that contains a single direct-drive actuator (i.e., non-tendon based) actuator **136** designed to control the twisting of the lower forearm **46**, **1046** and the hand assembly **200**, and (ii) a second group that contains eleven tendon-driving actuators **132**, **134** designed to control the movement of the joints in the hand assembly **200** and the wrist **50**, **1050**. The arm actuators contained in the torso **16**, **1016** and the actuators contained in the arm **5**, **1005** cooperate to position the hand assembly **200** that is coupled to the wrist **50**, **1050**. The actuators in the upper leg assembly include: (i) a hip flex actuator **720** (J**11**) configured to move the leg **6**, **1006** forward and backward relative to the robot's torso **16**, **1016**, (ii) a hip roll actuator **768** (J**12**) configured to move the leg **6**, **1006** sideways (e.g., to the left or right) relative to the robot's torso **16**, **1016**, (iii) a leg twist actuator **782** (J**13**) configured to rotate the leg **6**, **1006** relative to the robot's torso **16**, **1016**, and (iv) a knee actuator **820** (J**14**) configured to bend the knee of the leg **6**, **1006** of the robot **1**, **1001**. The actuators in the lower leg assembly include: (i) a foot flex actuator **860** (J**15**) configured to change the pitch of the foot **92**, **1092** and (ii) a foot roll actuator **900** (J**16**) configured to roll the foot **92**, **1092**.

[0152] The housing or exoskeleton of the components of robot **1**, **1001** can vary in shape and form based on individual structural or material requirements for the specific components (e.g., torso, shoulder, head, etc.). Although it may be desirable to utilize a particular material for all the housings to have a consistent exterior appearance for the robot, fabrication may be complicated by the varying structural or operational needs at different locations on the robot. It may not be necessary to utilize the same materials in different component housings that have different load requirements. Various materials may be preferred for a specific component housing based on properties such as strength, toughness, elasticity, yield point, strain energy, resilience, elongation during load, weight, and conductivity. Similarly, the complexity of some housing designs may be better suited for one type of manufacturing process over another. Various fabrication methods for the housing components can include machining, die casting, injection molding, compression molding, and composite fabrication, among others. For example, some housings may be fabricated from cast metal instead of machined metal to achieve the desired cost, form, speed of manufacturing, and mechanical properties.

[0153] To hide the fact that different fabrication methods may be used, that different materials may be used, or to conceal the surface finishes caused by the fabrication methods or the materials themselves, it may be advantageous to obscure the exterior of the housings using an exterior covering system **347**, **1347**. Said exterior covering system **347**, **1347** may provide additional benefits, as it can be easily replaced if damaged, protects internal components from dust and debris, conforms to the robot's form without excessive wrinkling, is generally inexpensive, and accommodates ventilation and thermal regulation needs. Further, the exterior covering system **347** may be designed so that it does not impede the range of motion of the robot **1**, **1001**, while maintaining access to underlying components and allowing for the access or operation of indicators or other functional elements (e.g., buttons, levers, etc.) on the robot's exterior surface.

[0154] The exterior covering system **347**, **1347** may include attachment mechanisms for secure, detachable mounting at multiple locations, such as the collar, waist, sleeves, and ankles. This multi-point attachment ensures a snug fit, reducing the risk of interference between the robot **1**, **1001** and factory equipment. In some instances, the cover members **347.2**, **1347.2** of the exterior covering system **347**, **1347** can attach directly to the surface of specific components or portions thereof. The exterior covering system **347**, **1347** can be constructed from highly durable textiles that exhibit high stretch capabilities and resistance to pilling, abrasions, and cuts. Additional information about said cover members and their materials is disclosed in U.S. patent application Ser. No. 19/066,122, which is incorporated herein by reference.

[0155] The disclosed exterior covering system **347**, **1347** for the humanoid robot **1**, **1001** is form-fitting, meaning it is neither loose nor detached by more than a small margin (e.g., between 1 inch and 5 inches, and preferably 3 inches) from the robot's exterior surface or the outer surface of an energy

attenuation assembly, without becoming disconnected. In other words, rather than draping loosely over the robot's frame, the exterior covering system is precisely and securely fitted to specific regions of the robot. The exterior covering material exhibits an elongation or stretch percentage exceeding 10% (preferably more than 30%, and most preferably greater than 50%), ensuring that when it is affixed to the robot **1**, **1001**, it remains under tension to conform closely to the robot's structure. Furthermore, a single cover member **347.2** does not cover or surround all actuators within the robot **1**, **1001**, nor a majority of the actuators contained in an upper portion of the robot **1**, **1001**, nor does it typically enclose more than three actuators at a time. In other words, a single cover member **347.2**, **1347.2** does not resemble an oversized jumpsuit with a single zipper extending from the pelvis to the head region. Additionally, it does not feature a hood that covers a substantial portion of the robot's head. Instead, the exterior covering system **347**, **1347** may be designed to include textile inserts positioned strategically between moving joint components to further ensure that pivoting motion is not restricted at the robot's joints. Different textile patterns are incorporated to facilitate movement in specific regions, enhancing the robot's functional dexterity.

C. Lower Arm Assembly

[0156] As shown in FIG. **3**, the lower arm assembly **28**, **1028** includes: (i) a forearm assembly **110**, (ii) an end effector or hand assembly **200**, (iii) an elbow assembly **150**, (iv) a wrist assembly **550**, and (v) a tendon assembly **600**. These components are arranged in the following manner, when moving outward from the center of the robot **1**, **1001** towards the fingertips of each lower arm assembly **28**, **1028**: (i) the elbow assembly **150** is coupled to a proximal end of the forearm assembly **110**, and (ii) the wrist assembly **550** is coupled between a distal end of the forearm assembly **110** and the hand assembly **200**. The tendon assembly **600** is arranged throughout portions of the forearm assembly **28**, **1028**, the wrist assembly **550**, and the hand assembly **200**. While the following text discloses an exemplary embodiment of the lower arm assembly **28**, **1028**, it should be understood that other embodiments are contemplated by this application.

1. Forearm Assembly

[0157] As shown in the Figures, the forearm assembly **110** is an integral component of the lower arm assembly **28**, **1028** because it secures and houses a plurality of actuators **130** configured to control the operation of the fingers, thumb, and wrist. As such, the forearm assembly **110** includes: (i) a forearm frame **112**, (ii) a plurality of actuators **130** configured to operate tendons **610** of the tendon assembly **600**, (iii) an electronics package **140** (e.g., control boards **140.2**, an encoder **140.4**, and wiring **140.6**), and (iv) a forearm housing **142**. The plurality of actuators **130** and the components of the electronics package **140** are arranged throughout and coupled to the forearm frame **112**. The forearm housing **142** extends around and encompasses the forearm frame **112**, actuators **130**, and the electronics package **140** to provide protection and a finished appearance. Alternatively, the forearm frame **112** may be omitted, and the forearm housing **142** may instead act as an exoskeleton to which the actuators **130** are directly coupled. In such an embodiment, the thickness and configuration of the housing **142** may be modified to be thicker than the housing **142** shown in the figures. The actuator mounting areas, which are associated with the frame **112** in the primary embodiment, may be integrally formed with or coupled to this exoskeletal housing **142**.

a. Forearm Frame

[0158] As shown in FIGS. **3** and **4**, the forearm frame **112** includes: (i) a wrist portion, distal end, or second end **114**, (ii) a third or distal mounting portion **116**, (iii) a second or intermediate mounting portion **118**, (iv) a first or proximal mounting portion **120**, and (v) an elbow portion, proximal end, or first end **122**. The elbow end portion **122** is configured to couple to the elbow assembly **150** using: (i) either or both an interior portion **122.2** and/or a threaded exterior portion **122.4**, and/or (ii) any other suitable means. The proximal mounting portion **120** extends from the elbow end portion **122** toward the wrist end portion **114** and stops at a proximal plane P_P that is positioned in the middle of a lower intermediate wall **119** that extends on the interior of the frame **112**. The distal mounting portion **116** is configured to couple to the wrist assembly **550** and extends from the wrist end portion **114** toward the elbow end portion **122**, while stopping at a distal plane P_D that is positioned in the middle of an upper intermediate wall **117** that extends on the interior of the frame **112**. Based on this configuration, the intermediate mounting portion **118** is located between and interconnects the distal mounting portion **116** and the proximal mounting portion **120**. As such, said intermediate mounting portion **118** extends between the proximal plane P_P and the distal plane P_D or between the middle of the lower intermediate wall **119** and the middle of the upper intermediate wall **117**. To note, an extent of the lower intermediate wall **117** is omitted to allow for a larger actuator H1 to be positioned within the intermediate mounting portion **118** in comparison to the other actuators H2 contained within the intermediate mounting portion **118**.

[0159] The distal, intermediate, and proximal mounting portions **116**, **118**, and **120** of the forearm frame **112** are configured to couple the plurality of actuators **130** and the components of the electronics package **140** therein. At least one control board **140.2** included in the electronics package **140** is coupled within each of the distal, intermediate, and proximal mounting portions **116**, **118**, and **120** and is configured to control the actuators **130** coupled in the respective sections **116**, **118**, and **120**. The encoder **140.4** included in the electronics package **140** is attached within the elbow end portion **122**. It should be understood that additional or fewer control boards and/or encoders may be coupled to the frame **112** at different portions or locations of the frame **112**.

[0160] As shown in FIGS. **3**, **4**, and **45**, the distal, intermediate, and proximal mounting portions **116**, **118**, and **120** have axial lengths. The distal mounting portion **116** has a first length LD defined between the wrist end portion **114** and the distal plane P_D. The intermediate mounting portion **118** has a second length L_I defined between the distal plane P_D and the proximal plane P_P. The proximal mounting portion **120** has a third length L_P defined between the proximal plate P_P and the elbow end portion **122**.

[0161] As shown in FIGS. **3**, **4**, and **45**, the frame **112**, the lower arm assembly **28**, **1028**, and a major portion of the arm **5**, **1005** has a tapered configuration. This tapered configuration causes the wrist **550** or an extent of the distal mounting portion **116** to have a distal perimeter, circumfer-

ence, and/or diameter D_D at a first location **116.4**, and wherein said distal perimeter, circumference, and/or diameter D_D extends from a first outermost distal point **116.6** that is positioned on an outer surface of the frame **112** in the distal portion **116** to an opposed second outermost distal point **116.8** that is positioned on an opposed surface of the frame **112**. Additionally, the intermediate mounting portion **118** has an intermediate perimeter, circumference, and/or diameter D_I at a second location **118.4**, and wherein said intermediate perimeter, circumference, and/or diameter D_I extends from a first outermost intermediate point **118.6** that is positioned on an outer surface of the frame **112** in the intermediate portion **118** to an opposed second outermost intermediate point **118.8** that is positioned on an opposed surface of the frame **112**. Further, the proximal mounting portion **120** has a proximal perimeter, circumference, and/or diameter D_P at a third location **120.4**, and wherein said proximal perimeter, circumference, and/or diameter D_P extends from a first outermost proximal point **120.6** that is positioned on an outer surface of the frame **112** in the proximal portion **120** to an opposed second outermost proximal point **120.8** that is positioned on an opposed surface of the frame **112**. As such, the proximal perimeter, circumference, and/or diameter D_P is significantly less than 100 mm and preferably less than 70 mm. The distal perimeter, circumference, and/or diameter D_D is less than the intermediate perimeter, circumference, and/or diameter D_I, and both are less than the proximal perimeter, circumference, and/or diameter D_P. In other words, the proximal perimeter, circumference, and/or diameter D_P is larger than the intermediate perimeter, circumference, and/or diameter D_I, which is larger than the distal perimeter, circumference, and/or diameter D_D. Finally, the first location **116.4** is closer to the wrist **550** than the second location **118.4**, and the second location **118.4** is closer to the wrist **550** than the third location **120.4**. In other words, the first location **116.4** is located at a first location or distance from the elbow assembly **150**, while the second location **118.4** is located at a second location or distance from the elbow assembly **150**, and wherein the second distance is less than the first distance. Likewise, the second location **118.4** is located at a second location or distance from the elbow assembly **150**, while the third location **120.4** is located at a third location or distance from the elbow assembly **150**, and wherein the third distance is less than the second distance.

[0162] As shown in FIGS. **3** and **4**, the plurality of actuators **130** that are coupled to the mounting portions **116**, **118**, and **120** of the forearm frame **112** include twelve separate and distinct actuators. These twelve actuators **130** can be split into two main groups: (i) a first group that contains a single direct-drive actuator (e.g., non-tendon based) actuator **136** designed to control the twisting of the lower forearm **46**, **1046** and the hand assembly **200** in a clockwise and counter-clockwise manner, and (ii) a second group that contains eleven rotary actuators **132**, **134** that are designed to interface with the tendon assembly **600** to control the movement of the joints in the hand assembly **200** and the wrist **50**, **1050**. The actuator **136** of the first group is coupled to the proximal mounting portion **120** of the forearm frame **112**, while the actuators **132**, **134** of the second group are distributed among each of the mounting portions **116**, **118**, and **120** of the frame **112**. In particular, the second group includes four actuators **134** that are coupled to the distal mounting portion **116**, four actuators (a combination of actuators **132** and **134**) that are coupled to the intermediate mounting portion **118**, and three actuators **132** that are coupled to the proximal mounting portion **120**. It should be understood that in other embodiments, each portion of the frame **112** may include additional actuators (e.g., 5-7) or may contain fewer actuators (e.g., 0-3). This is specifically true if actuators are moved out of the lower forearm **46**, **1046** and into the hand assembly **200** or into a region positioned between the lower forearm **46**, **1046** and the upper forearm **40**, **1040**. Some of the contemplated alternative embodiments are disclosed in other sections.

[0163] As shown in at least FIGS. **3**, **4**, **44**, **45**, the formation of the three mounting portions **116**, **118**, and **120** of the frame **112** is also associated with three distinct arrangements of said actuators **130**—namely, a proximal actuator arrangement, first plurality of actuators, or a proximal plurality of actuators **130.2**, an intermediate actuator arrangement, third plurality of actuators, or an intermediate plurality of actuators **130.4**, and a distal actuator arrangement, second plurality of actuators, or a distal plurality of actuators **130.6**. The first plurality of actuators or proximal arrangement of actuators **130.2** are arranged radially around the forearm axis A in the proximal mounting portion **120**. Said first plurality of actuators or proximal arrangement of actuators **130.2** includes four actuators of the H1 size **132**, wherein each of the four H1 actuators have upper and lower surfaces **130.2.4**, **130.2.6** that are coplanar with one another. Additionally, the four H1 actuators contained in the proximal arrangement of actuators **130.2** have rotational axes A_P that are parallel to one another, equally spaced around the forearm axis A, and parallel with said forearm axis A. Further, a first actuator **130.2.2** contained in the first plurality of actuators **130.2** is in contact with a first tendon **610.2** and includes a first tendon departure region **612**, wherein the first tendon departure region **130.2.8** is positioned at a location where the tendon **610.2** extends above an upper surface **130.2.4** of the first actuator **130.2.2**.

[0164] The second plurality of actuators or distal arrangement of actuators **103.6** are arranged radially around the forearm axis A in the distal mounting portion **116**. Said second plurality of actuators or distal arrangement of actuators **130.6** includes four actuators of the H2 size **134**, wherein each of the four H2 actuators have upper and lower surfaces **130.6.4**, **130.6.6** that are coplanar with one another. Additionally, the four H2 actuators contained in the distal arrangement of actuators **130.6** have rotational axes A_P that are parallel to one another, equally spaced around the forearm axis A, and parallel with said forearm axis A. Further, a second actuator **130.6.2** contained in the second plurality of actuators **130.6** is in contact with a second tendon **610.4** and includes a second tendon departure region **130.6.8**, wherein the second tendon departure region **130.6.8** is positioned at a location where the tendon **610.4** extends above an upper surface **130.6.4** of the second actuator **130.6.2**. While the first tendon departure region **130.2.8** is positioned at a first distance D_F from the wrist assembly **550** and the second tendon departure region **130.6.8** is positioned at a second distance D_S from the wrist assembly **550**, and wherein the first distance D_F is not equal (specifically larger) to the second distance D_S.

[0165] Finally, the third plurality of actuators or intermediate arrangement of actuators **130.4** are arranged radially around the forearm axis A in the intermediate mounting portion **118**. Said third plurality of actuators or intermediate

arrangement of actuators **130.4** includes three H2 actuators **134** and one H1 actuator **132**, wherein each of the three H2 actuators and one H1 actuator have upper and lower surfaces **130.4.4**, **130.4.6**. While the upper surfaces of all four actuators are coplanar with one another, said lower surfaces **130.4.6** of all four actuators are not coplanar with one another. Nevertheless, the three H2 actuators and one H1 actuator contained in the intermediate arrangement of actuators **130.4** have rotational axes A_I that are parallel to one another and parallel with said forearm axis A. Further, a third actuator **130.4.2** contained in the third plurality of actuators **130.4** is in contact with a third tendon **610.6** and includes a third tendon departure region **130.4.8**, wherein the third tendon departure region **130.4.8** is positioned at a location where the tendon **610.6** extends above an upper surface **130.4.4** of the third actuator **130.4.2**. The third tendon departure region **130.4.8** is positioned at a third distance D_T from the wrist assembly **550**, and wherein the third distance D_T is not equal to either the first or second distances D_F, D_S. Specifically, the third distance D_T is larger than the second distance D_S, but smaller than the first distance D_F. It should be understood that rotational axes A_P, A_I A_P are not co-linear with each other. The radial arrangement of rotational axes A_P, A_I A_P with decreasing perimeters, circumferences, and/or diameters relative to each other as one moves from the proximal extent or the proximal mounting portion **120** of the frame **112** to the distal extent or distal mounting portion **116** of the frame **112** enables the perimeter, circumference, and/or diameter of the forearm to be reduced as one moves from the proximal extent **120** of the frame **112** to the distal extent **116** of the frame **112**. This enables the radial distance to the exterior surfaces of the arrangement of actuators to decrease as one moves from the proximal extent **120** of the frame **112** to the distal extent **116** of the frame **112**.

[0166] As best shown in at least FIG. **45**, the upper or outer and lower or inner surfaces **130.2.4**, **130.2.6**, **130.6.4**, **130.6.6** of the actuators in the proximal and distal arrangements **130.2**, **130.6** generally include at least a portion that is arranged perpendicular to the forearm or longitudinal axis A of the forearm frame **112**. Additionally, the positioning of the tendon departure regions **130.2.8**, **130.4.8**, **130.6.8**, the extent of the actuators that are closest to the wrist assembly **550** (e.g., upper extent), an extent of the actuators that are farthest way from the wrist assembly **550** (e.g., lower extent), or any other consistent measurement will indicate that the actuators have an offset, stacked rearward, or longitudinal arranged configuration. This is discussed above by the fact that the third distance D_T is larger than the second distance D_S, but smaller than the first distance D_F. This longitudinal stacking (e.g., closer/further way from the wrist assembly **550**) enables the lower arm assembly **28**, **1028**, and a major portion of the arm **5**, **1005** to have a tapered configuration. In other words, the first (e.g., proximal) plurality of actuators **130.2** are generally positioned farthest away from the wrist assembly **550** and closest to the elbow assembly **150**, the second (e.g., distal) plurality of actuators **130.6** are generally positioned farthest way from the elbow assembly **150** and closest to the wrist assembly **550**, and the third (e.g., intermediate) plurality of actuators **130.4** are positioned between the first plurality of actuators and the second plurality of actuators **130.2**, **130.6**. Additionally, the first (e.g., proximal) plurality of actuators **130.2** is positioned radially or laterally outward of the third (e.g., intermediate) plurality of actuators **130.4**, while the third (e.g., intermediate) plurality of actuators **130.4** is positioned radially or laterally outward of the second (e.g., distal) plurality of actuators **130.6**. This combination of longitudinal and radial stacking is externally beneficial because it provides access to run the tendons without interference with other actuators and a tapered design. The combined radial and longitudinal stacking arrangement provides a benefit over arrangements that are only either radially stacked or longitudinally stacked, but not both. The latter non-combined arrangements would undesirably require a large forearm.

[0167] The actuators **130** contained within the first (e.g., proximal) plurality of actuators **130.2** and coupled to the proximal mounting portion **120** may each be configured to provide a force on the end effector **200** via a corresponding tendon. Similarly, the actuators **130** contained within the second (e.g., distal) plurality of actuators **130.6** and coupled to the distal mounting portion **116** may each be configured to provide a force on the end effector **200** via a corresponding tendon, and the actuators **130** contained within the third (e.g., intermediate) plurality of actuators **130.4** and coupled to the intermediate mounting portion **118** may each be configured to provide a force on the end effector **200** via a corresponding tendon. The force applied by each (or at least one) of those actuators individually in the first (e.g., proximal) plurality of actuators **130.2** may be greater than the force applied by each (or at least one) of those actuators **130** individually in the second (e.g., distal) plurality of actuators **130.6** and the third (e.g., intermediate) plurality of actuators **130.4**. Additionally, the force applied by each (or at least one) of those actuators individually in the third (e.g., intermediate) plurality of actuators **130.4** may be greater than the force applied by each (or at least one) of those actuators **130** individually in the second (e.g., distal) plurality of actuators **130.6**.

[0168] As shown in the Figures, the lower forearm **46**, **1046** does not include more than 12 actuators **130** to control the at least 9 disclosed degrees of freedom. It should be understood that in other embodiments, the configuration of the actuators may not have decreasing exterior surfaces, or the rotational axes may be co-linear or coplanar with each other. Further, the actuators **130** contained within the frame **112** may not be positioned in the precise manner disclosed here. Instead, the actuator mounts **116.2**, **118.2**, and **120.2** may have an alternative arrangement so that said actuators **130** may be offset vertically or horizontally from one another within a single arrangement. Additionally or alternatively, the rotational axes of the actuators **130** may not extend along the longitudinal axis A of the forearm assembly **110**, but instead may be arranged perpendicular to said longitudinal axis A.

b. Actuators of the Forearm Assembly

[0169] The twelve actuators **130** that are contained in the forearm assembly **110** and coupled to the forearm frame **112** may include two different sizes of rotary actuators-namely, a first size (H1) **132** and a second size (H2) **134**, in addition to one direct-drive actuator (e.g., non-tendon based) actuator **136**. In the disclosed design, the frame **112** is designed to accommodate the following actuators, wherein the second or distal mounting portion is designed to house the actuators that control portions of each finger, the third or intermediate mounting portion is designed to house actuators that control portions of the wrist, thumb, and index finger, and the first or proximal mounting portion is designed to house actuators that control the thumb and wrist. The positioning of the

actuators may be based on: (i) local or total curvature of the tendons, (ii) length of the tendon, (iii) forces exerted by the that portion of the end effector (e.g., thumb may need to exert a larger amount of force in comparison to the little finger), (iv) acceleration of the end effector. In particular, it may be beneficial to position the actuator associated with the thumb rearward of the actuator associated with the little finger to help minimize local or total curvature of the tendon associated with the thumb in comparison to the little finger, as a reduction in local or total curvature can allow for an increase force that the tendon can transfer to the moving structure (e.g., thumb or little finger).

[0170] While the rotary or cycloidal actuators **132**, **134** share a common cross-sectional design, they differ primarily in physical dimensions and torque. The first or larger size actuator (H1) **132** can produce a max peak torque output between 2 and 10 Nm, preferably between 3 and 7 Nm and has a perimeter, circumference, and/or diameter of 29 mm or less and a height of 49 mm or less, while the second or smaller size actuator (H2) **134** can produce a max peak output torque output between 0.5 and 3 Nm, preferably between 0.75 and 2 Nm and has a perimeter, circumference, and/or diameter of 22 mm or less and a height of 47 mm or less.

[0171] As shown in FIGS. **5-9**, each rotary or cycloidal actuator **132**, **134** includes: (i) an output shaft **131.4**, (ii) an output cap **131.6**, (iii) a retaining cap **131.8**, (iv) a cycloidal spline **131.10**, (v) an actuator housing **131.12**, (vi) a motor retaining cap **131.14**, (vii) a motor controller **131.16**, (viii) a motor **131.20**, (ix) a single-stage cycloidal disc **131.22**, and (x) output bearings **131.26**, **131.28**. The H1 actuator **132** can produce between 3.5 and 5 Nm continuous torque output or more with its single-stage cycloidal disc **131.22**, motor **131.20**, and motor controller **131.16**. The single cycloidal disc **131.22** has external gear teeth or lobes. The cycloidal spline **131.10** has internal gear teeth or pins. The cycloidal disc **131.22** and the cycloidal spline **131.10** contact each other at the gears or lobes and pins.

[0172] Unlike conventional actuators, the disclosed rotary or cycloidal actuators **132**, **134** employ a single cycloidal disc **131.22**. Specifically, said actuators **132**, **134** include an input shaft that may be driven by any known type of motor with any combination of stator and rotor. As such, said motor **131.20** may be any one of various motor types, including brushless DC motors, stepper motors, servo motors, coreless DC motors, synchronous AC motors, asynchronous induction motors, linear motors, piezoelectric motors, direct-drive motors, switched reluctance motors, permanent magnet synchronous motors (PMSMs), axial flux motors, and hybrid stepper motors. The disclosed motors of the actuators **132**, **134** may include a stator and a rotor. Said stator may include support components that are segmented in a radial direction or in a stacked or horizontal direction. The support components may be made from or include a metallic or metallic-based material, which includes electrical steel (i.e., silicon steel), non-oriented electrical steel including 0.5% to 3.25% silicon, a nickel-iron alloy, such as Permalloy (45% Ni, 55% Fe) or Supermalloy (79% Ni, 16% Fe, 5% Mo), a cobalt-iron alloy, such as Permendur (49% Co, 49% Fe, 2% V), one or more amorphous metals, one or more soft magnetic composites (SMC), and/or a combination of these and/or other similar materials. The motor windings may use or include round or flat wires and may implement a random approach, a layered approach, a quadrature approach, or any other approach. The windings may use aluminum or high-conductivity copper wire with advanced ceramic or polyimide insulation for superior thermal and electrical performance.

[0173] The rotor of the motor **131.20** may or may not be segmented and may include or be comprised of materials such as: (i) neodymium-iron-boron (NdFeB), (ii) samarium-cobalt (SmCo), (iii) alnico (Aluminum-Nickel-Cobalt), (iv) bonded magnets (e.g., Bonded NdFeB and Bonded Ferrite), (v) iron-chromium-cobalt (FeCrCo), (vi) cobalt-platinum (CoPt) and iron-platinum (FePt), (vii) hexaferrites (e.g., BaFe, SrFe), (viii) manganese-aluminum (MnAl), (ix) any combination thereof, and/or (x) any other similar material or material that one of skill in the art may use in said magnets. Further, said motors **131.20** may be packed with a potting material after they are installed within their housings to improve thermal dissipation and structural integrity. The potting material may include or be comprised of: (i) an epoxy resin, (ii) a polyurethane resin, (iii) a silicone resin, (iv) an acrylic resin, (v) a ceramic-based potting compound, and/or a combination thereof.

[0174] The motor **131.20** can be operatively coupled to at least one eccentric bearing assembly **131.32**. The eccentric bearing assembly **131.32** imparts an orbital motion, which is characterized by an eccentricity 'e', to the single cycloidal disc **131.22** as the input shaft rotates about its primary axis. The cycloidal disc **131.22** features a peripheral profile that is defined by a plurality of lobes, which are commonly based on epitrochoidal or hypotrochoidal curves generated relative to the stationary gear component. This lobed profile of the disc meshingly engages with a plurality of pins, rollers, or teeth that are disposed on a stationary ring gear, often referred to as a cycloidal spline **131.10**, which is fixed relative to the actuator housing **131.12**. The cycloidal spline **131.10** can be a hollow cylindrical structure having internal gears or pins that extend across its thickness. The single cycloidal disc **131.22** can also be a hollow cylindrical structure having external gears or lobes that extend across its thickness. The cycloidal disc **131.22** can also have four cylindrical holes that extend through the thickness of the disc **131.22**. The output shaft assembly can have a cylindrical output shaft **131.4** coupled to one side of a disc and four cylindrical rollers that extend from the opposite side. The output shaft **131.4** and the four cylindrical rollers can be oriented perpendicular to the planar end surfaces of the disc. When assembled, the cycloidal disc **131.22** is placed within the cycloidal spline **131.10**, and the four cylindrical rollers are placed through the four corresponding holes in the cycloidal disc **131.22**. In other embodiments, any other number of cylindrical rollers and holes can be used in the cycloidal actuator design.

[0175] The mechanism of speed reduction arises from the differential kinematics between the orbiting cycloidal disc **131.22** and the stationary ring gear. Typically, the number of lobes on the cycloidal disc differs by a small integer (e.g., one) from the number of pins or rollers in the stationary ring gear. As the eccentric bearing **131.32** drives the disc **131.22** through its orbital path, the difference in lobe count forces the disc to precess, executing a slow rotation relative to the stationary ring gear, typically in the direction opposite to the input shaft's rotation. The magnitude of this speed reduction is determined by the number of lobes on the disc and the number of pins or rollers on the ring gear. Torque is transmitted from the precessing cycloidal disc **131.22** to an output member via a plurality of output rollers or pins. These

output rollers are typically mounted on an output flange or disc (which is coupled to the actuator's output shaft **131.4**) and pass through corresponding apertures, such as precisely bored holes, within the body of the cycloidal disc **131.22**. This arrangement allows the output rollers to accommodate the orbital motion of the disc while transmitting only its slow, high-torque rotational component to the output shaft.

[0176] Conventional single-disc cycloidal actuators often suffer from a dynamic imbalance. This imbalance results from the center of mass of the cycloidal disc and its associated eccentric components orbiting the input shaft's axis of rotation at the input angular velocity. This imbalance generates a rotating centrifugal force vector, the magnitude of which increases quadratically with input speed. This can potentially cause significant vibration, acoustic noise, increased bearing loads, reduced positioning accuracy, and component fatigue. To address this issue, the disclosed actuators **132**, **134** incorporate specific design features. One such feature involves optimizing the profile of the cycloidal disc itself, potentially by utilizing a shortened cycloid profile. Said shortened cycloid profile may be characterized by lobes that are smoother and possess less radial height compared to a standard cycloidal profile. The less aggressive geometry of these shortened lobes potentially allows for proper meshing and load transmission with the ring gear pins, even when the overall orbital path, and thus the driving eccentricity, is decreased. To maintain a specific desired gear reduction (which requires keeping the same number of lobes on the disc) while simultaneously reducing the eccentricity, the fundamental geometric parameters that define the profile must be adjusted in a coordinated manner, typically involving proportional scaling. The inherent smoothness and reduced radial extent of the shortened cycloid profile can make it more tolerant of such adjustments, potentially enabling effective gear operation under lower eccentricity conditions where a standard profile might encounter interference or inadequate engagement. Specific embodiments may utilize an eccentricity offset of approximately 0.05 mm to 0.3 mm, and lobe or pin perimeters, circumferences, and/or diameters or maximum thicknesses between 0.1 mm and 0.6 mm.

[0177] Furthermore, the dynamic imbalance can be actively counteracted by incorporating balancing features into the rotating input shaft assembly. In one embodiment, the input shaft is counterbalanced by precisely offsetting its central bore relative to its axis of rotation, for instance, by an offset distance that is equal to the disc eccentricity (e.g., 0.1-0.6 mm). This offset may be oriented towards the direction of the eccentric bearing's maximum throw to preferentially remove mass from the heavier side of the rotating assembly. Alternatively, or in conjunction with other methods, counterbalancing can be achieved by adding discrete counterweights, potentially made of high-density materials, to the input shaft at a location diametrically opposite to the primary imbalance vector created by the eccentric bearing and disc. Conversely, mass can be strategically removed from the input shaft, such as by drilling blind or through-holes, or by creating machined cutouts in the portion of the shaft that is aligned with the eccentric offset. These balancing features are configured to shift the center of mass of the combined input shaft, eccentric bearing (s), and potentially associated hardware closer to the input shaft's axis of rotation, thereby minimizing the net rotating imbalance force. Depending on the axial distribution of mass, multi-plane dynamic balancing of the input shaft assembly may be employed for more precise correction.

[0178] Alternative or supplementary methods for addressing dynamic imbalance may also be contemplated. In one alternative, the cycloidal disc **131.22** itself could be designed with an asymmetric mass distribution, independent of its functional gear profile. This could be achieved by adding or removing material from its body to shift its intrinsic center of mass closer to its geometric center, or even partially towards the input axis, thereby reducing its contribution to the overall imbalance. Another approach involves incorporating passive or semi-active vibration damping mechanisms within the actuator structure or its mounting interface. This could also include the use of elastomeric elements strategically placed to isolate or absorb vibrations, or potentially tuned mass dampers designed to counteract vibrations at specific problematic frequencies, which are typically related to the input shaft speed.

[0179] To achieve a high gear ratio in the compact design of said actuators **132**, **134** generally requires a small eccentricity value. For instance, a design targeting a 50:1 or greater gear ratio within a 25 mm outer perimeter, circumference, and/or diameter might necessitate an eccentricity as small as 0.05 mm to 0.3 mm. This small eccentricity, in turn, often dictates correspondingly small pin perimeters, circumferences, and/or diameters (e.g., potentially 0.1-0.6 mm). Such small pins concentrate the transmitted load onto diminutive surface areas, leading to significantly elevated stress concentrations on these critical load-bearing components. Furthermore, manufacturing components with the tight tolerances required for such small eccentricities is challenging; fabrication imperfections and tolerance stack-up can degrade performance, resulting in reduced output torque capability, increased backlash, and lower overall efficiency. To overcome these limitations, several design and material strategies may be employed. First, design modifications have been made to the actuators **132**, **134** to help said actuators distribute the transmitted load more effectively. One approach involves increasing the axial width (or thickness) of the cycloidal disc, potentially doubling its width compared to conventional single-disc designs. This modification increases the contact area between the disc lobes and the spline features along the axial dimension. This increased contact surface helps to distribute the load over a larger material area, potentially keeping stresses below critical material limits (e.g., a design target of below 1130 MPa). Another synergistic approach involves designing the gear profile interaction such that the load is shared simultaneously across multiple points of contact (e.g., distributing the load between up to five pins or lobes in contact at any given time, analogous to load sharing in planetary gearsets). This significantly reduces the peak stress experienced by any single pin or lobe. Increasing the axial height of the pins themselves also contributes to a larger contact surface area. By strategically combining material selection (e.g., high hardness materials), increased component width, and multi-point load distribution, it is possible to realize high-performance rotary actuators that achieve substantial gear ratios (e.g., 58:1) within highly constrained package perimeters, circumferences, and/or diameters (e.g., 20 mm and 25 mm), overcoming the inherent challenges of stress concentration and manufacturability associated with miniaturized, high-ratio rotary drives.

[0180] In addition to the above modifications, specific materials and manufacturing methods have been utilized for the pins, rollers, and engaging surfaces of the disc and spline. Specifically, components of said actuators **132**, **134** may include or be fabricated from SUJ2/AISI 52100, grade 440c, grade 420, 440m/cronidur 30 type, grade 410, grade 416, xd15nw/cronidur x15 type, xd16n, 17-4 PH/AISI 630, 15-5 PH, custom 455, custom 465, AISI 8630, AISI 4820, AISI 9310, AISI 4320, scm440/AISI 4140, AISI 4340, AISI 5160, S45c/AISI 1045, AISI 1050, AISI 1060, A2 tool steel, D2 tool steel, O1 tool steel, M2 tool steel, powder metallurgy (PM) tool steels, grade 303 stainless steel, grade 304 stainless steel, grade 316 stainless steel, TI-6AL-4V (grade 5 titanium), other titanium alloys, brass, phosphor bronze, aluminum bronze, cobalt-chromium alloys (stellite type), zirconia (ZrO_2), silicon nitride (Si3N4), alumina (Al2O3), silicon carbide (SiC), machinable glass-ceramic (macor type), polyetheretherketone (PEEK) (unfilled), polyetheretherketone (PEEK) (filled, bearing grade), acetal (POM) (delrin type), polyamide (PA/nylon), polyphenylene sulfide (PPS), polycarbonate (PC), polyamide-imide (PAI) (torlon type), polyimide (PI) (vespel type), or any combination thereof.

[0181] Additionally, components of said actuators **132**, **134** may be manufactured using processes such as precision CNC machining (milling, turning), hard machining (hard turning, hard milling), electrical discharge machining (wire EDM, sinker EDM), micro powder injection molding (μ-MIM), UV-LIGA (lithography, electroplating, molding), laser machining, electrochemical machining (ECM), heat treatment including through hardening (quenching and tempering), case hardening (carburizing, nitriding, carbonitriding), precipitation hardening, cryogenic treatment, stress relieving, and tempering. Finishing processes may include precision profile grinding, creep feed grinding, surface grinding, cylindrical grinding, jig grinding, lapping, polishing, superfinishing, honing, precision deburring, ultrasonic cleaning, dimensional inspection, surface finish measurement (profilometry), hardness testing, or any combination thereof. As such, the actuators **132**, **134** may have a hardness that is greater than 60 Rockwell hardness, a dimensional tolerance of +/−0.005 mm or less, and a surface finish of 16 Ra or less. These material properties reduce the friction coefficient while providing sufficient strength for a small (25 mm or less) perimeter, circumference, and/or diameter, high torque (5 Nm or more), high efficiency (80% or more) rotary actuator.

[0182] Further, the rotary actuators **132**, **134** can have package sizes with perimeters, circumferences, and/or diameters of 25 mm and 20 mm or less. The H1 embodiment of the rotary actuator **132** can have a height that is between 30 mm and 60 mm and a perimeter, circumference, and/or diameter between 15 mm and 60 mm, with a peak output torque of approximately 5 Nm and an efficiency of 80% or more. The H2 embodiment of the rotary actuator **134** can have a height that is between 20 mm and 55 mm and a perimeter, circumference, and/or diameter between 12 mm and 55 mm, with a peak output torque of approximately 1.16 Nm and an efficiency of 80% or more. The disclosed design provides a significant advantage in efficiency over conventional designs. For example, a conventional harmonic drive can have an efficiency of approximately 10% at 1% of its maximum torque and approximately 83% efficiency at 100% of its maximum torque. A conventional planetary drive can have an efficiency of approximately 20% at 1% of its maximum torque and approximately 83% efficiency at 100% of its maximum torque. Li's cycloid drive can have an efficiency of 80% at 1% of its maximum torque and approximately 94% efficiency at 100% of its maximum torque. In contrast, the disclosed actuator system of actuators **132**, **134** is designed to have a more uniform efficiency, potentially reaching 95% across a wide range of its maximum torque, from 1% to 100%.

2. End Effector or Hand Assembly

[0183] As shown in FIGS. **10-44**, the end effector or hand assembly **200** is configured to support a load of at least 8 Kg, and preferably more than 10 Kg, and most preferably more than 20 Kg. The end effector **200** includes a hand housing **300**, a thumb assembly **400**, and at least one finger assembly **210**, illustratively shown as a plurality of finger assemblies **210***a-d*. The thumb assembly **400** and the plurality of finger assemblies **210***a-d* are coupled to the hand housing **300**. The plurality of finger assemblies **210** includes an index finger **210***a*, a middle finger **210***b*, a ring finger **210***c*, and a little finger **210***d*. Each of the plurality of fingers **210** includes the same structural components, with the exception of the index finger **210***a*, from which a spacer **230** is omitted to provide an additional degree of freedom (DoF). This configuration simplifies manufacturing and assembly, and reduces the number of unique parts required for the hand assembly **200**. However, it should be understood that in other embodiments, some or all of the fingers **210** may be structurally unique. For example, these alternative embodiments might be structured as follows: (i) the index finger **210***a* and the middle finger **210***b* are the same, while the ring finger **210***c* and the little finger **210***d* are the same, such that the index finger **210***a* and ring finger **210***c* are different, (ii) the index finger **210***a* is unique, the middle finger **210***b* is unique, and the ring finger **210***c* and the little finger **210***d* are the same, such that the index, middle, and ring fingers **210***a*, **210***b*, **210***c* are different, (iii) the middle finger **210***b* is unique, the little finger **210***d* is unique, and the index finger **210***a* and the ring finger **210***c* are the same, such that the index, middle, and little fingers **210***a*, **210***b*, **210***d* are different, and/or (iv) any combination of the above or any other combination that is known by one of skill in the art.

[0184] The disclosed end effector or hand assembly **200** includes nine degrees of freedom (9 DoF). The index finger **210***a* has at least three DoF: (i) abduction/adduction at the first or metacarpophalangeal (IMCP) joint, (ii) flexion/extension of the first or metacarpophalangeal (IMCP) joint, and (iii) flexion/extension of the second or proximal interphalangeal (IPIP) joint. The middle finger **210***b* has at least 2 DoF: (i) flexion/extension of the first or metacarpophalangeal (MMCP) joint, and (ii) flexion/extension of the second or proximal interphalangeal (MPIP) joint. The combined ring and little fingers **210***c*, **210***d* have at least 1 DoF: (i) flexion/extension of the second or proximal interphalangeal (RPIP, LPIP) joint. The thumb **400** has at least 3 DoF: (i) abduction/adduction of the first thumb joint or trapeziometacarpal (TTM) joint, (ii) flexion/extension of the second thumb joint or carpometacarpal (TCMC) joint, and (iii) flexion/extension of the third thumb joint or metacarpophalangeal (TMCP) joint.

[0185] Each of the fingers **210***a-d* are fixed at the distal interphalangeal (DIP) joint at a preset inward angle (e.g., between 20 degrees and 90 degrees), which may be the same

or different for each of the fingers **210***a-d*. Similarly, the distal interphalangeal (TIP) joint of the thumb **400** is also fixed at an inward angle that is the same as or different from the angle of the DIP joints of the fingers **210***a-d*. In other embodiments, the DIP joints and the TIP joint may be fixed at smaller angles with the MCP joints positioned with a bend. In further embodiments, bends at the DIP joints and the TIP joint may be omitted. It should be understood that the hand assembly **200** may include or specifically lack temperature sensors, current sensors, voltage sensors, or other types of sensors.

a. Palm

[0186] As shown in FIGS. **3**, **10**, **34**, **35**, and **43**, the hand housing **300** includes: (i) a palm frame **310**, (ii) a palm cover **312**, and (iii) a carpal tunnel-like structure **370**. Each finger assembly **210** is coupled to the palm frame **310**. The palm frame **310** also defines a cavity **310.2.10** in which parts of the tendon assembly **600** may be located. The palm cover **312** is coupled to the palm frame **310** to enclose the tendon assembly **600** within the cavity **310.2.10** and to shield access to the finger attachment points **310.2***a-d*. As depicted in FIGS. **34-36**, **42**, and **43**, the carpal tunnel-like structure **370** is coupled to the palm frame **310** and is configured to guide at least some tendons **610** of the tendon assembly **600** from the forearm assembly **110** and the wrist assembly **550** to the hand housing **300**. For example, at least two tendons (tendons RLF2E and RLF2F) are not guided by the carpal tunnel-like structure **370**, but instead are routed through an opening **310.2.12** formed in the palm frame **310** that opens to the cavity **310.2.10**. In other embodiments, the carpal tunnel-like structure **370** may be integrally formed with an extent of the housing **300** or the palm frame **310** and as such may be formed from a combination of housing **300** or palm frame **310** projections and/or recesses. In further embodiments, the carpal tunnel-like structure **370** may be omitted.

[0187] As shown in FIGS. **3**, **10**, **34**, **35**, and **43**, the palm frame **310** defines: (i) a base **310.2** having a plurality of finger attachment points **310.2***a-d*, (ii) a thumb receptacle **310.4**, and (iii) a wrist mount **310.6**. The base **310.2** has a first interior wall extent **310.2.2**, a second interior wall extent **310.2.4** positioned a first distance from the first interior wall extent **310.2.2**, a third interior wall extent **310.2.6**, and a fourth interior wall extent **310.2.8** positioned a second distance from the third interior wall extent, wherein the second distance is closer to the base **310.2** of the hand housing **300** than the first distance. The interior walls **310.2.2**, **310.2.4**, **310.2.6**, **310.2.8** define the cavity **310.2.10** in which parts of the tendon assembly **600** may be located. The opening **310.2.12** for the other tendons not routed through the carpal tunnel-like structure **370** is formed in the first interior wall extent **310.2.2**.

[0188] As shown in FIGS. **3**, **10**, **34**, **35**, and **43**, each finger assembly **210** is coupled to the palm frame **310** at one of the finger attachment points **310.2***a-d*. Specifically, The index finger **210***a* is coupled to the index attachment point **310.2***a*, the middle finger **210***b* is coupled to the middle attachment point **310.2***b*, the ring finger **210***c* is coupled to the ring attachment point **310.2***c*, and the little finger **210***d* is coupled to the little attachment point **310.2***d*. The thumb assembly **400** is coupled to the thumb receptacle **310.4** of the palm frame **310**. The wrist assembly **550** is coupled to the wrist mount **310.6** of the palm frame **310**. The carpal tunnel-like structure **370** may be positioned between the first interior wall extent **310.2.2** and the second interior wall extent **310.2.4**.

[0189] As shown in FIGS. **34-43**, the carpal tunnel-like structure **370** includes: (i) a bottom carpal tunnel member **370.2**, (ii) a top carpal tunnel member **370.4**, and (iii) fastening means **370.6**. The fastening means **370.6** (e.g., bolts) couples the bottom and top carpal tunnel members **370.2**, **370.4** to clamp around the sheaths **615** and tendons **610** routed therethrough. The fastening means **370.6** may also couple the bottom and top carpal tunnel members **370.2**, **370.4** to the palm frame **310**. The bottom carpal tunnel member **370.2** is formed to include a plurality of bottom tendon grooves **370.2.2**, and the top carpal tunnel member **370.4** is formed to include a plurality of top tendon grooves **370.4.2**. The bottom and top tendon grooves **370.2.2**, **370.4.2** receive portions of the sheaths **615** when the bottom and top members **370.2**, **370.4** are coupled together. As best shown in FIGS. **35**, **36**, and **38**, the carpal tunnel-like structure **370** that includes an opening **370.1** formed between the bottom carpal tunnel member **370.2** and the top carpal tunnel member **370.4**, and wherein interior extents of said opening **370.1** serve to define a centroid C. The centroid C of the opening **370.1** (or in an alternative, the carpal tunnel-like structure **370**) is offset from the rotational axis (e.g., pitch axis **556.6** or yaw axis **554.6**), whereby said centroid C does not lie on the rotational or pitch axis **556.6**. As shown in FIG. **35**, the centroid C of the opening **370.1** is offset from the rotational or pitch axis **556.6** by an offset distance Do. In other embodiments, the centroid C of the opening **370.1** (or the carpal tunnel-like structure **370**) may lie on or in a rotational axis (e.g., pitch axis **556.6** or yaw axis **554.6**)

[0190] As shown in FIGS. **34**, **35**, and **84-87**, the hand housing **300** also houses a finger coupler **330**. The finger coupler **330** is arranged in the cavity **310.2.10** and is configured to link the movement of certain fingers, namely the little finger **210***d* and the ring finger **210***c*. The finger coupler **330** includes: (i) a track **332**, (ii) slides **334.2**, **334.4**, and (iii) wheel guides **336.2**, **336.4** coupled to the top and bottom slides **334.4**, **334.2**. The track **332** has a bottom track channel **332.2** and a top track channel **332.4**. A bottom slide **334.2** is configured to move within the bottom track channel **332.2**, and a top slide **334.4** is configured to move within the top track channel **332.4**. One wheel guide **336.2** is coupled to the bottom slide **334.2**, and the other wheel guide **336.4** is coupled to the top slide **334.4** to move therewith. Each wheel guide **336.2**, **336.4** has grooves **336.2.2**, **336.4.2** for a u-shaped tendon **610** that extends around the wheel guide **336.2**, **336.4**. The tendons **610** for the fingers **210***c*, **210***d* extend around the bottom and top wheel guides **336.2**, **336.4**, which are configured to slide in the track channels **332.2**, **332.4** to control the flexion and extension of the fingers **210***c*, **210***d*. The track **332** is also formed to include guide channels **332.6.2**, **332.6.4** for tendons **610** that extend from the slides **334.2**, **334.4** back to a respective actuator **130**. The arrangement of the tendons **610** on the finger coupler **330** is discussed in more detail below.

b. Fingers

[0191] As shown in FIGS. **11-31** and **47-67**, each finger assembly **210** of the hand assembly **200** includes: (i) a knuckle assembly **220**, (ii) a proximal assembly **270**, and (iii) a medial-distal assembly **290**. The knuckle assembly **220** of each finger **210***a-d* is coupled to the palm frame **310**

at the finger attachment points **310**.**2***a-d*. As shown in FIGS. **3**, **10**, **34**, and **35**, the locations of the connection between each finger **210***a-d* and the hand housing **300** are staggered and/or are not coplanar with one another. This configuration enables the distal ends of the fingers **210***a-d* to be offset relative to one another. In other embodiments, the locations of the connection between the finger assemblies **210***a-d* and the hand housing **300** may not be staggered and/or may be coplanar. The proximal assembly **270** is coupled to the knuckle assembly **220**, forming a first finger joint, or metacarpophalangeal (MCP) joint. The medial-distal assembly **290** is coupled to the proximal assembly **270**, forming a second finger joint, or proximal interphalangeal (PIP) joint. In the illustrative embodiment, the third finger joint, or distal interphalangeal (DIP) joint, is fixed at a predetermined angle within the medial-distal assembly **290**. One or more of the knuckle assembly **220**, proximal assembly **270**, and medial-distal assembly **290** may include sensors, circuit boards, wiring, or other electronic components. In particular, the distal ends of the finger assemblies **210** may include pressure sensors, and encoders (e.g., absolute or incremental, magnetic and/or optical) may be placed at one or more of the joints. Additionally, a hand controller can send joint angles and wrist positions at a frequency between 150 Hz and 350 Hz.

i. Knuckle Assembly

[0192] As shown in FIGS. **11-31** and **47-67**, the knuckle assembly **220** includes: (i) a knuckle support **222**, (ii) a spacer **230**, (iii) a knuckle enclosure **240**, (iv) bearings **264**, **268**, and (v) pins **266**. Although the components are the same for all fingers **210***a-d*, the spacer **230** is omitted from the index finger **210***a* to allow for abduction and adduction movement at the first joint, or MCP joint, of the index finger **210***a*, thereby providing an additional DoF.

[0193] Shown in FIGS. **11-31** and **47-67**, the knuckle support **222** includes: (i) a support base **224**, (ii) mounting portions **226**, and (iii) a finger support **228** projecting from the support base **224**. The support base **224** has a central portion **224.2**, an upper portion **224.4**, and a lower portion **224.6**. The support base **224** is also formed to include a plurality of cable passageways **224.8.2**, **224.8.4**, **224.8.6** extending therethrough. Each cable passageway **224.8.2**, **224.8.4**, **224.8.6** is configured to allow passage and movement of a tendon **610** of the tendon assembly **600**. For example, as shown in FIG. **14**, a first set of cable passageways **224.8.2** is spaced on opposing sides of the finger support **228** to receive flexion and extension portions of a tendon **610** that controls the first finger joint or MCP joint, a second set of cable passageways **224.8.4** is positioned in an upper portion **224.4** of the support base **224**, and a third set of cable passageways **224.8.6** is positioned in the lower portion **224.6**. The mounting portions **226** project laterally from the central portion **224.2** of the support base **224** and include mounting apertures **226.2** configured to receive fasteners to secure the knuckle support **222** to the palm frame **310**. The finger support **228** projects from the central portion **224.2** of the support base **224** and has a post **228.2** at its distal end of the finger support **228**. The knuckle support **222** also includes a wire conduit **228.4** through the support base **224** that extends from an access slot **228.6** in the post **228.2** through the finger support **228** and the support base **224** (see e.g., FIG. **24**).

[0194] As shown in FIG. **11**, the spacer **230** includes a pair of blocks **232** connected by a bridge section **234** and is configured to couple with the knuckle support **222**. In the illustrative example, the blocks **232** of the spacer **230** are substantially triangular in shape and are spaced apart with a width substantially similar to the width of the finger support **228**. For instance, when coupled to the knuckle support **222**, the blocks **232** on opposing sides of the finger support **228** taper outward from a position near the post **228.2** to the support base **224**. The width of the spacer **230** is not greater than the width of the support base **224** at the mounting portions **226**. As noted above, the spacer **230** is omitted from the configuration of the index finger (IF) **210***a* (see e.g., FIGS. **47-67**).

[0195] As shown in FIGS. **11-31** and **47-67**, the knuckle enclosure **240** includes: (i) a top member **242**, (ii) a bottom member **252**, and (iii) a clasp **260**, and is designed to protect and substantially encase the other components of the knuckle assembly **220**. The knuckle enclosure **240** is also configured to enclose a portion of the tendon assembly **600** and includes exterior guide slots **246.2**, **262.2** for additional portions of the tendon assembly **600**. The knuckle enclosure **240** is configured to couple with the knuckle support **222** at the post **228.2**, where a bearing **264** may be positioned around top and bottom extents of the post **228.2** to receive the knuckle enclosure **240**. For the index finger **210***a*, the omission of the spacer **230** allows for limited rotation of the knuckle enclosure **240** about the post **228.2**, which permits abduction and adduction movement. For the middle, ring, and little fingers **210***b-d*, the knuckle enclosure **240** is configured to surround the knuckle support **222** and the spacer **230** such that there is no rotational movement at the post **228.2**. In all fingers **210***a-d*, the knuckle enclosure **240** is coupled to the post **228.2** of the knuckle support **222** in the same manner. The clasp **260** is configured to conform to an exterior portion of the knuckle enclosure **240** to couple the top and bottom members **242**, **252** together.

[0196] As shown in FIGS. **11-31** and **47-67**, the top member **242** has: (i) an interior portion **244**, (ii) an exterior surface **246**, and (iii) a coupling surface **248**. The interior portion **244** includes a circular projection **244.2** configured to receive the bearing **264** positioned around a top extent of the post **228.2**, a cable recess **244.4** configured to receive an extent of a tendon **610**, and a ball seat **244.6** configured to retain a ball **630** coupled to the tendon **610** within the cable recess **244.4**. The exterior surface **246** includes exterior cable guide slots **246.2**, a semi-circular mount **246.4** projecting from one side of the top member **242**, and a ring portion mount **246.6** projecting from a side opposite the semi-circular mount **246.4**. A wire passage **246.8**, located at the ring portion mount **246.6**, extends from the exterior surface **246** to the interior portion **244** and is configured to route wiring therethrough. The coupling surface **248** is substantially flat and includes holes **248.2** to receive mounting pins **266** for coupling the top and bottom members **242**, **252** of the knuckle enclosure **240**.

[0197] Shown in FIGS. **11-31** and **47-67**, the bottom member **252** of the knuckle enclosure **240** is configured to be complementary to the top member **242**. The bottom member **252** includes: (i) an interior portion **256**, (ii) a coupling surface **258**, and (iii) an exterior surface **262**. The coupling surface **258** is substantially flat with an arcuate projection **258.4** projecting therefrom. The coupling surface **258** also includes holes **258.2** to receive mounting pins **266** to couple the top and bottom members **242**, **252**. The arcuate projection **258.4** projects from the coupling surface **258** and

is configured to (i) be received within the cable recess **244.4** of the top member **242**, retaining the ball **630** coupled to the tendon **610** within the seat **244.6** of the top member **242**, and (ii) receive the bearing **264** positioned around a bottom extent of the post **228.2**. The exterior surface **262** includes exterior cable guide slots **262.2**, a semi-circular mount **262.4** projecting from one side of the bottom member **252**, and a ring portion mount **262.6** projecting from a side opposite the semi-circular mount **262.4**.

ii. Proximal Assembly

[0198] As shown in FIGS. **11-31** and **47-67**, the proximal assembly **270** includes: (i) a proximal member **272**, (ii) spanning covers **274**, (iii) a proximal housing assembly **280**, (iv) wheels **282**, and (v) pins **284**. The proximal member **272** is configured to receive the wheels **282** and the pins **284** to route a tendon **610** through the proximal member **272**. The spanning covers **274** are each configured to couple the proximal assembly **270** with the knuckle assembly **220** at a first end **274.2** to form the first finger joint or MCP joint and with the medial-distal assembly **290** at a second end **274.4** to form the second finger joint or PIP finger joint. The proximal housing assembly **280** is configured to enclose at least a portion of the proximal member **272** and/or the spanning covers **274** and may be made from a polymeric material (e.g., polyurethane) that may be injection molded or 3D printed.

[0199] As shown in FIGS. **11-31** and **47-67**, the proximal member **272** includes: (i) a top surface **272.2** with two spaced-apart wheel wells **272.4**, (ii) a first slot **272.6** that extends between the two wheel wells **272.4**, (iii) a second slot **272.8** with a ball recess **272.8.2**, and (iv) a bottom surface **272.10**. The first and second slots **272.6**, **272.8** are substantially parallel to each other and are configured to receive a tendon **610**. The two wheel wells **272.4** are configured to receive the pins **284** and the wheels **282** to rotatably secure the wheels **282** at least partially within the respective wheel wells **272.4**. At one end of the first slot **272.6**, there is a ball recess **272.6.2** configured to receive a ball **630** attached to a tendon **610**. The second slot **272.8** is also configured to receive a ball **630** attached to a tendon **610** within its ball recess **272.8.2**.

[0200] As shown in FIGS. **11-31** and **47-67**, the spanning covers **274** each include: (i) a central portion **276** and (ii) rounded end portions **278** at the first and second ends **274.2**, **274.4** of the spanning cover **274**. The central portion **276** of each spanning cover **274** is configured to cover the sides of the proximal member **272**, with the rounded end portions **278** projecting outward. The rounded end portions **278** include interior-facing circular indentations **278.2**. The circular indentations **278.2** of the rounded end portions **278** on the first end **274.2** of each spanning cover **274** are configured to receive the circular mounts **246.4**, **262.4** protruding from the knuckle assembly **220**. The circular indentations **278.2** of the rounded end portions **278** on the second end **274.4** of each spanning cover **274** are configured to receive circular mount projections **292.2.2** protruding from the medial-distal assembly **290**.

[0201] As shown in FIGS. **11-31** and **47-67**, The proximal housing assembly **280** includes: (i) a bottom cover **286** and (ii) a top cover **288**. The bottom cover **286** extends around the bottom surface **272.10** of the proximal member **272** and at least a portion of the spanning covers **274**. The top cover **288** is coupled to the top surface **272.2** of the proximal member **272** and extends over it to enclose the wheel wells **272.4**. The top cover **288** prevents access to the pins **284**, the wheels **282**, and the tendon **610** within the slots **272.6**, **272.8**. As shown in FIG. **10**, the bottom cover **286** has two separate components **286.2**, **286.4** that are coupled or fixed together. Alternatively, the bottom cover **286** may be a single-piece component. The bottom cover **286** includes: (i) a bottom cover wall **286.6**, (ii) a first cover sidewall **286.8**, and (iii) a second cover sidewall **286.10**. The sidewalls **286.8**, **286.10** extend from the bottom wall **286.6** and form attachment lips **286.8.2**, **286.10.2**. These lips extend over a portion of the top surface **272.2** of the proximal member **272** and the central portion **276** of the spanning covers **274** to couple the bottom cover **286** to the proximal member **272** and the spanning covers **274**. The top cover **288** has grooves **288.2**, **288.4** that receive the attachment lips **286.8.2**, **286.10.2** when the top cover **288** is coupled to the top surface **272.2** of the proximal member **272**.

iii. Medial-Distal Assembly

[0202] As shown in FIGS. **11-31** and **47-67**, the medial-distal assembly **290** includes: (i) a medial-distal member **292**, (ii) a medial-distal housing assembly **294**, and (iii) bearings **296**. The medial-distal housing assembly **294** is configured to enclose at least a portion of the medial-distal member **292**. Components of the medial-distal housing assembly **294** may be made from a polymeric material (e.g., polyurethane) that may be injection molded or 3D printed.

[0203] As shown in FIGS. **11-31** and **47-67**, the medial-distal member **292** includes: (i) a coupling end portion **292.2**, (ii) a distal end portion **292.4**, and (iii) a medial portion **292.6** that extends therebetween. The coupling end portion **292.2** includes circular mount projections **292.2.2** protruding outward from opposite sides of the medial-distal member **292** and is configured to couple with the second end **274.4** of the proximal assembly **270**. These circular mount projections **292.2.2** are configured to be received into the circular indentations **278.2** of the rounded end portions **278** on the second end **274.4** of the proximal assembly **270** on both sides, thereby forming the to form the second finger joint or PIP finger joint.

[0204] As shown in FIGS. **11-29** and **47-67**, the coupling end portion **292.2** also has an exterior surface **292.2.4** that includes a top guide slot **292.2.4.2** and a bottom guide slot **292.2.4.6**. The top and bottom guide slots **292.2.4.2**, **292.2.4.6** extend around the end of the coupling end portion **292.2**, but do not intersect. Each guide slot **292.2.4.2**, **292.2.4.6** extends through a portion of the medial portion **292.6** and ends in a ball seat **292.2.4.4**, **292.2.4.8**. The top ball seat **292.2.4.4** is located at the end of the top guide slot **292.2.4.2**, and the bottom ball seat **292.2.4.8** is located at the end of the bottom guide slot **292.2.4.6**. Each ball seat **292.2.4.4**, **292.2.4.8** is configured to receive a ball **630** attached to the respective tendon **610** located in the corresponding slot **292.2.4.2**, **292.2.4.6**.

[0205] As shown in FIGS. **11-29** and **47-67**, the distal end portion **292.4** includes: (i) a circular bulge **292.4.2** and (ii) a tip **292.4.4** that extends therefrom. The circular bulge **292.4.2** extends from the medial portion **292.6**. Although the circular bulge **292.4.2** is configured to represent a third finger joint, or the DIP joint, there is no rotational motion at this joint. The tip **292.4.4** extends from the circular bulge **292.4.2** at a preset or predefined angle (e.g., 44 degrees) and provides a mounting point for a portion of the medial-distal housing assembly **294**.

[0206] As shown in FIGS. **11-29** and **47-67**, the medial-distal housing assembly **294** includes: (i) a medial housing **294.2**, (ii) a distal housing **294.4**, and (iii) a fingertip cover **294.6**. The medial housing **294.2** is configured to surround the medial portion **292.6**. The distal housing **294.4** and the fingertip cover **294.6** are configured to cooperate to enclose the tip **292.4.4**. The distal housing **294.4** is configured to be coupled to a bottom surface **292.4.4.2** of the tip **292.4.4**, and the fingertip cover **294.6** is configured to be coupled to a top surface **292.4.4.4** of the tip **292.4.4**. The distal housing **294.4** and/or the fingertip cover **294.6** may be made from a polymeric material (e.g., polyurethane) that may be injection molded or 3D printed.

c. Thumb

[0207] As shown in FIGS. **31-33** and **68-83**, the thumb assembly **400** includes: (i) a thumb knuckle assembly **410**, (ii) a thumb proximal assembly **430**, and (iii) a thumb distal assembly **450**. The thumb knuckle assembly **410** is coupled to the hand housing **300** at the thumb receptacle **310.4** to allow for abduction and adduction movement at the first thumb joint, or trapeziometacarpal (TTM) joint. The thumb proximal assembly **430** is coupled to the thumb knuckle assembly **410** for flexion and extension at the second thumb joint, or carpometacarpal (TCMC) joint. The thumb distal assembly **450** is coupled to the thumb proximal assembly **430**, forming the third thumb joint, or metacarpophalangeal (TMCP) joint. In the illustrative embodiment, the fourth thumb joint, or interphalangeal (TIP) joint, is fixed at a predetermined angle for the thumb tip **458.4** of the thumb distal assembly **450**.

i. Thumb Knuckle Assembly

[0208] As shown in FIGS. **31-33** and **68-83**, the thumb knuckle assembly **410** includes: (i) a thumb knuckle member **412** and (ii) a thumb support **420**. The thumb knuckle member **412** includes a first spool **414**, a second spool **416**, and a housing structure **418** configured to couple the first and second spools **414**, **416** perpendicular to each other. The first and second spools **414**, **416** form at least a portion of the first thumb joint or TTM joint and the second thumb joint or TCMC joint, respectively. As shown in FIG. **34**, the first spool **414** forms a portion of the first thumb joint or TTM and the second spool **416** forms a portion of the second thumb joint or TCMC joint. The thumb support **420** is configured to couple to the thumb receptacle **310.4** of the hand housing **300**.

[0209] As shown in FIGS. **31-33** and **68-83**, the thumb knuckle member **412** includes: (i) the first spool **414**, (ii) the second spool **416**, and (iii) the housing structure **418**. The first spool **414** includes a first hub **414.2** recessed from the first rims **414.4** and is configured to receive a tendon **610**. The first hub **414.2** has anchoring recesses **414.2.2** for one or more balls **630** attached to the tendon **610**. The second spool **416** includes a second hub **416.2** configured to receive a tendon **610**. The housing structure **418** includes: (i) circular mounts **418.2.2** extending outward from the housing structure **418** and axially aligned with the second hub **416.2**, and (ii) cable passageways **418.4.2**, **418.4.4** extending therethrough for the tendons **610**. The circular mounts **418.2** have a hub aperture **416.2.2** therethrough configured to receive cylindrical mounts **442.2** of the thumb proximal assembly **430**. As shown in FIGS. **31** and **32**, the housing structure **418** also has cable covers **418.4** and fastening means **418.6** (e.g., bolts). The cable covers **418.4** are coupled to the main structure **418.2** with the fastening means **418.6** and block access to the tendons **610** routed through the housing. As shown in FIGS. **31-33** and **68-83**, the thumb support **420** includes: (i) a support base **422** and (ii) a mounting portion **424**. The support base **422** is coupled to the first spool **414** of the thumb knuckle member **412**. The mounting portion **424** is coupled to the support base **422** and is configured to mount the thumb assembly **400** to the hand housing **300**. Both the support base **422** and the mounting portion **424** include cable passageways **422.2**, **422.4**, **422.6**, **424.2** extending therethrough.

ii. Thumb Proximal Assembly

[0210] As shown in FIGS. **31-33** and **68-83**, the thumb proximal assembly **430** includes: (i) a proximal thumb member **432**, (ii) thumb spanning covers **434**, (iii) a proximal thumb housing assembly **444**, (iv) thumb wheels **446**, and (v) thumb pins **448**. The proximal thumb member **432** is configured to receive the wheels **446** and the pins **448** to route a tendon **610** through the proximal thumb member **432**. The spanning covers **434** are configured to couple the thumb proximal assembly **430** with the thumb knuckle assembly **410** at a first end **436** to form the second thumb joint or TCMC joint, and with the thumb distal assembly **450** at a second end **438** to form the third thumb joint or TMCP joint. The proximal thumb housing assembly **444** is configured to enclose at least a portion of the proximal thumb member **432** and/or the spanning covers **434** and may be made from a polymeric material (e.g., polyurethane) that may be injection molded or 3D printed.

[0211] Similar to the finger proximal assembly **270** and as shown in FIGS. **31-33** and **68-83**, the proximal thumb member **432** includes: (i) a top surface **432.2** with two spaced-apart wheel wells **432.4**, (ii) a first slot **432.6** extending between the two wheel wells **432.4**, (iii) a second slot **432.8** with a ball recess **432.8.2**, and (iv) a bottom surface **432.10**. The first and second slots **432.6**, **432.8** are substantially parallel to each other and are configured to receive a tendon **610**. The two wheel wells **432.4** are configured to receive the pins **448** and wheels **446** to rotatably secure the wheels **446** at least partially within the respective wheel wells **432.4**. At one end of the first slot **432.6**, a ball recess **432.6.2** is configured to receive a ball **630** attached to a tendon **610**. The second slot **432.8** is also configured to receive a ball **630** attached to a tendon **610** within its ball recess **432.8.2**.

[0212] As shown in FIGS. **31-33** and **68-83**, the spanning covers **434** each include: (i) a central portion **440** and (ii) rounded end portions **442**. The central portion **440** of the spanning covers **434** is configured to cover the sides of the proximal thumb member **432**, with the rounded end portions **442** projecting outward. The rounded end portions **442** include interior-facing cylindrical mounts **442.2** projecting inward from one spanning cover **434** to be received by the other spanning cover **434**. The cylindrical mounts **442.2** of the rounded end portions **442** on the first end **436** of the respective spanning cover **434** are configured to be received into the hub aperture **416.2.2** of the thumb knuckle assembly **410**. The cylindrical mounts **442.2** of the rounded end portions **442** on the second end **438** of the respective spanning cover **434** are configured to be received into a mounting aperture **456.2** of the thumb distal assembly **450**.

[0213] As shown in FIGS. **31-33** and **68-83**, the proximal thumb housing assembly **444** includes: (i) a bottom thumb cover **444.2** and (ii) a top thumb cover **444.4**. The bottom thumb cover **444.2** extends around the bottom surface **432**.

10 of the proximal thumb member **432** and at least a portion of the thumb spanning covers **434**. The top thumb cover **444.4** is coupled to the top surface **432.2** of the proximal thumb member **432** and extends over the top surface **432.2** to enclose the wheel wells **432.4**, thereby preventing access to the pins **448**, wheels **446**, and the tendon **610** within the slots **432.6**, **432.8**. As shown in FIG. **31**, the bottom thumb cover **444.2** is comprised of multiple separate components that are coupled or fixed together. Alternatively, the bottom thumb cover **444.2** may be a single-piece component. The bottom thumb cover **444.2** includes: (i) a bottom thumb cover wall **444.2.2**, (ii) a first thumb cover sidewall **444.2.4**, and (iii) a second thumb cover sidewall **444.2.6**. The thumb cover sidewalls **444.2.4**, **444.2.6** extend from the bottom thumb cover wall **444.2.2** and over a portion of the top surface **432.2** of the proximal thumb member **432** and the central portion **440** of the spanning covers **434** to couple the bottom thumb cover **444.2** to the proximal thumb member **432** and spanning covers **434**. The top thumb cover **444.4** has grooves **444.4.2** that receive a portion of the bottom thumb cover **444.2** when the top thumb cover **444.4** is coupled to the top surface **432.2** of the proximal thumb member **432**.

iii. Thumb Medial-Distal Assembly

[0214] As shown in FIGS. **31-33** and **68-83**, the thumb distal assembly **450** includes: (i) a thumb medial-distal member **452**, (ii) a thumb medial-distal housing assembly **454**, and (iii) a clasp **462**. The thumb medial-distal housing assembly **454** is configured to enclose at least a portion of the thumb medial-distal member **452**. The clasp **462** is designed to protect and substantially encase the other components of the thumb distal assembly **450** and is configured to conform to a portion of the thumb medial-distal member **452**. Components of the thumb medial-distal housing assembly **454** may be made from a polymeric material (e.g., polyurethane) that may be injection molded or 3D printed.

[0215] As shown in FIGS. **31-33** and **68-83**, the thumb medial-distal member **452** includes: (i) a coupling end portion **456**, (ii) a distal end portion **458**, and (iii) a medial portion **460** therebetween. The coupling end portion **456** includes a circular mounting aperture **456.2** extending through the thumb medial-distal member **452** and is configured to couple with the second end **438** of the thumb proximal assembly **430**. The circular mounting aperture **456.2** is configured to receive one of the cylindrical mounts **442.2** of the spanning covers **434** on the second end **438** of the proximal assembly **430** to form the third thumb joint or TMCP joint.

[0216] As shown in FIGS. **31-33** and **68-83**, the coupling end portion **456** also has an exterior surface **456.4** that includes a top guide slot **456.4.2** and a bottom guide slot **456.4.6**. The top guide slot **456.4.2** and the bottom guide slot **456.4.6** extend around the coupling end portion **456**, but do not intersect. Each of the guide slots **456.4.2**, **456.4.6** extends through a portion of the medial portion **460** and ends in a ball seat **456.4.4**, **456.4.8**. The top ball seat **456.4.4** is located at the end of the top guide slot **456.4.2**, and the bottom ball seat **456.4.8** is located at the end of the bottom guide slot **456.4.6**. Each of the top ball seat **456.4.4** and the bottom ball seat **456.4.8** is configured to receive a ball **630** attached to a respective tendon **610** located in the respective slot **456.4.2**, **456.4.6**.

[0217] As shown in FIGS. **31-33** and **68-83**, the distal end portion **458** includes: (i) a circular bulge **458.2** and (ii) a tip **458.4**. The circular bulge **458.2** extends from the medial portion **460** and represents the fourth thumb joint, although there is no rotational motion at this joint. The tip **458.4** extends from the bulge at an angle (e.g., 44 degrees).

[0218] As shown in FIGS. **31-33** and **68-83**, the thumb medial-distal housing assembly **454** includes: (i) a medial housing **454.2**, (ii) a distal housing **454.4**, and (iii) a thumb tip cover **454.6**. The medial housing **454.2** is configured to surround the medial portion **460**. The distal housing **454.4** and the thumb tip cover **454.6** are configured to cooperate to enclose the tip **458.4**. The distal housing **454.4** is configured to be coupled to a bottom surface **458.4.2** of the tip **458.4**, and the thumb tip cover **454.6** is configured to be coupled to a top surface **458.4.4** of the tip **458.4**. The distal housing **454.4** and/or the thumb tip cover **454.6** may be made from a polymeric material (e.g., polyurethane) that may be injection molded or 3D printed.

[0219] Said housing of the finger or thumb assemblies may be made from silicon, plastic (e.g., may include a known polymer composition), carbon composite, metal, a combination of these materials, and/or any other known material used in robot systems. In some embodiments, the exterior or skin of the finger or thumb assemblies may be less rigid or softer than the internal components of said assemblies. For example, the exterior or skin of the finger housing may be made from a deformable silicon material, while the internal frame of the finger assembly may be made from metal. It should be understood that these are examples of possible configurations and are not intended to be limiting in any manner.

3. Wrist Assembly

[0220] As shown in FIGS. **34-42** and **88-93**, the wrist assembly **550** includes: (i) at least a housing coupling component **552**, (ii) a yaw component **554**, (iii) a pitch component **556**, (iv) a base structure **558**, and (v) a wrist tendon routing structure **560** (see, e.g., FIGS. **39-41**). The wrist assembly **550** is coupled to the wrist mount **310.6** of the palm frame **310** by the housing coupling component **552**. The yaw and pitch components **554**, **556** are coupled to the housing coupling component **552**. As shown in FIGS. **90** and **91**, the yaw component **554** is configured to cooperate with the tendon assembly **600** and an actuator **130** to move the hand assembly **200** from side to side (e.g., wave). as shown in FIGS. **92** and **93**, The pitch component **556** is configured to cooperate with the tendon assembly **600** and an actuator **130** to move the hand assembly **200** up and down. It should be understood that alternative connection methods or structures may be used. The base structure **558** is configured to couple to the forearm assembly **110**. As shown in FIGS. **34** and **42**, the wrist tendon routing structure **560** is coupled to the base structure **558** and configured to guide tendons **610** of the tendon assembly **600** from the wrist assembly **550** to the forearm assembly **110**.

a. Housing Coupling Component

[0221] As shown in FIGS. **34-42** and **88-93**, the housing coupling component **552** includes: (i) a base member **552.2**, (ii) a cover member **552.4**, and (iii) fasteners **552.6**. Portions of the yaw and pitch components **554**, **556** are coupled to the base member **552.2**. of the housing coupling component **552**. The base member **552.2** may be modular, with multiple components assembled to attach the palm frame **310** and the base structure **558**. The base member **552.2** is also formed to define tendon guides **552.2.2**, **552.2.4** through which the

tendons for the pitch component **556** of the wrist assembly **550**, i.e., WRPE and WRPF, are routed. The wrist pitch tendons WRPE and WRPF are routed through tendon or cable guides **556.8.2**, **556.8.4** formed in the thumb receptacle **310.4**, through the tendon guides **552.2.2**, **552.2.4**, through the wrist tendon routing structure **560**, and to the respective actuator **130**. The cover member **552.4** is coupled to the base member **552.2** over the tendon guides **552.2.2**, **552.2.4** to prevent access to the tendons **610**. Threaded fasteners **552.6** (e.g., bolts) may be utilized to secure the cover member **552.4** to the base member **552.2** over the tendon guides **552.2.2**, **552.2.4**. Other suitable fasteners or fastening means may be used, including, but not limited to, screws, pins, rivets, etc.

[0222] As shown in FIGS. **37**, **88**, and **89**, the base member **552.2** is also formed to include: (i) tendon or cable guides **554.8.2**, **554.8.4** and (ii) ball catches **554.10.2**, **554.10.4** of the yaw component **554**. The tendons **610** for the yaw component **554** of the wrist assembly **550**, i.e., WRYAB and WRYAD, are routed through one of the cable guides **554.8.2**, **554.8.4** and attached to a ball **630** that is seated in the respective ball catch **554.10.2**, **554.10.4**. The wrist yaw tendons WRYAB and WRYAD are routed through the cable guides **554.8.2**, **554.8.4** to the wrist tendon routing structure **560**, and to the respective actuator **130**.

b. Yaw and Pitch Components

[0223] As shown in FIGS. **34-42** and **90-93**, portions of the yaw and pitch components **554**, **556** are coupled to the housing coupling component **552**. The yaw component **554** includes pegs **554.2** that mate with bearings **554.4** coupled to the base member **552.2** of the housing coupling component **552**. The pegs **554.2** extend from the base structure **558** along a yaw axis **554.6** and into the bearings **554.4** coupled to the base member **552.2** so that the hand assembly **200** may pivot from side to side (e.g., wave) about the yaw axis **554.6**, as shown in FIGS. **90** and **91**. The pitch component **556** includes pegs **556.2** that mate with bearings **556.4** coupled to the wrist mount **310.6** of the palm frame **310**. The pegs **556.2** extend from the base member **552.2** of the housing coupling component **552** along a pitch axis **556.6** and into the bearings **556.4** coupled to the wrist mount **310.6** so that the hand assembly **200** may pivot up and down about the pitch axis **556.6**, as shown in FIGS. **92** and **93**. Alternatively, the arrangement of the pegs **554.2**, **556.2** and bearings **554.4**, **556.4** may be reversed for each of the yaw and pitch components **554**, **556**.

c. Wrist Tendon Routing Structure

[0224] As shown in at least FIGS. **3**, **10**, and **34**, **36**, **40-42**, the wrist tendon routing structure **560** includes: (i) a routing plate **562**, (ii) bushing sub-assemblies **564**, and (iii) a clamp assembly **566**. The routing plate **562** is coupled to the base structure **558** and is formed with a center aperture **562.2** and guide channels **562.4** for the tendons **610** routed therethrough, as shown in FIGS. **36-41**, **46**. The bushing sub-assemblies **564** are coupled to the base structure **558** and spaced apart around its outer edge **558.2** of the base structure **558**. Each bushing sub-assembly **564** has a dowel **564.2** coupled to the base structure **558** and a plurality of pulleys **564.4** arranged on the dowel **564.2** to rotate about it. As shown in FIG. **41**, each tendon **610** is routed through the center aperture **562.2**, through a respective guide channel **562.4**, and around one of the pulleys **564.4** to the respective actuator **130**. The wrist yaw tendons WRYAB and WRYAD are the only tendons not routed through the center aperture **562.2** and the guide channels **562.4**. Rather, the wrist yaw tendons WRYAB and WRYAD are routed from the housing coupling component **552** to respective pulleys **564.4**. The routing of the tendons **610** through the guide channels **562.4** is discussed in further detail below.

[0225] With the tendons **610** routed through the routing plate **562** and the bushing sub-assemblies **564**, the clamp assembly **566** has a plurality of clamp plates **566.2** that are each coupled to the routing plate **562** over the tendons **610**. Each clamp plate **566.2** has corresponding guide channels **566.2.2** (see, e.g., FIGS. **42** and **46**) for the tendons **610** that align with the guide channels **562.4** in the routing plate **562**. The clamp plates **566.2** are coupled to the routing plate **562** with fastening means **566.4** including, but not limited to, bolts, screws, pins, rivets, or other suitable fastening means. The clamp plates **566.2** prevent access to the tendons **610** and help guide the respective tendons **610** to the corresponding bushing sub-assembly **564**.

4. Tendon Assembly

[0226] As shown in FIGS. **5-9** and **34-84**, the tendon assembly **600** includes: (i) tendons **610**, (ii) tendon sheaths or sheaths **615**, and (iii) tendon routing structures (e.g., a spool frame **640**, a spool **644**, a pulley system **650**, a wrist tendon routing structure **560**). The tendons **610** are routed from components of the hand assembly **200**, across respective tendon routing structures, to respective actuators **130** in the forearm assembly **110**. Movement of a tendon **610** across these components and structures will cause an extent of a finger **210***a-d*, thumb **400**, or the wrist assembly **550** to move. Specifically, the rotational or angular movement of an actuator **132**, **134** will pull one side of the tendon loop and release the opposite side. As such, each tendon is designed to provide either: (i) both extension and flexion, or (ii) both abduction and adduction, thus providing that component with one DoF. This design reduces the required number of actuators **130** and helps minimize the need for syncing actuators **130** for controlling the hand assembly **200**.

a. Tendons

[0227] The tendons **610** may have any workable configuration or be made from any suitable material, which includes or excludes: (a) a configuration that may be a single strand or a multi-strand (e.g., between 2 and 1000 strands), (b) materials such as steel, high-carbon steel, stainless steel, titanium alloy, tungsten alloy, nitinol, beryllium copper, nickel-chromium alloy, phosphor bronze, molybdenum alloy, rhenium alloy, magnesium alloy, metal wire rope, metal cable, shape memory alloy, copper-based shape memory alloy, iron-based shape memory alloy, polyethylene, ultra-high-molecular-weight polyethylene (UHMWPE), aramid fiber, Kevlar, Technora, Nomex, liquid crystal polymer fiber (LCP), Vectran, poly(p-phenylene-2, 6-benzobisoxazole) fiber (PBO), polyhydroquinone-diimidazopyridine fiber (M5), carbon fiber, polyester fiber, polyamide, nylon, polyether ether ketone (peek), polyethylene terephthalate (pet), acetal (pom), polypropylene (pp), polylactic acid (PLA), polyurethane (PU), silicone rubber, liquid crystal elastomer (LCE), thiolene polymer, thermoplastic elastomer (TPE), fishing line, twisted and coiled polymer (TCP) actuator material, supercoiled polymer (SCP) actuator material, electroactive polymer (EAP), composite material, fiber-reinforced polymer (FRP), carbon fiber reinforced polymer (CFRP), aramid fiber reinforced polymer (AFRP), glass fiber reinforced polymer (GFRP), basalt fiber rein-

forced polymer (BFRP), hybrid fiber-reinforced polymer, metal matrix composite (MMC), polymer nanocomposite, silk fiber, spider silk fiber, collagen fiber, cellulose fiber, or nanocellulose fiber. Additionally, the spool **644** and any component that comes into contact with a tendon **610** may be coated with materials such as hard anodize, hard anodize with PTFE, cerakote, nickel-PTFE composite, electroless nickel plating, titanium nitride (TIN), chromium nitride (CRN), tungsten disulfide (WS2), molybdenum disulfide (MoS2), diamond-like carbon (DLC), plasma electrolytic oxidation (PEO), physical vapor deposition (PVD), boron nitride, nickel, silicon nitride, graphene, polymer, ceramic, or any similar coating.

[0228] The tendon assembly **600**, as illustrated in the example embodiment, includes eleven tendons **610**, which each tendon **610** having extension/flexion or abduction/addition portions. These eleven tendon **610** can be allocated as follows: (i) three tendons actuate the index finger (3 DoF), (ii) two tendons actuate the middle finger (2 DoF), (iii) one tendon actuates the combined ring and little fingers (1 DoF), (iv) three tendons actuate the thumb (3 DoF), and (v) two tendons actuate the wrist (2 DoF for pitch and yaw). The actuators associated with each of the eleven tendons **610**, with the respective tendon portions, are positioned in the following locations in the forearm assembly **110**:

i. Index Finger—IF

[0229] The index finger **210***a* is controlled by at least three tendons **610**: (i) a first tendon (may also be referred to as a finger ABD/ADD tendon or, if separated, an finger ABD tendon and finger ADD tendon) comprised of tendon portions IF**1**ABD and IF**1**ADD to control abduction and adduction at the MCP joint (IMCP, IF**1**), (ii) a second tendon (may also be referred to as an index proximal tendon, index MCP tendon, or, if separated, an index MCP extension tendon and index MCP flexion tendon) comprised of tendon portions IF**2**E and IF**2**F to control extension and flexion at the MCP joint (IMCP, IF**2**), and (iii) a third tendon (may also be referred to as an index medial tendon, index PIP tendon, or, if separated, an index PIP extension tendon and index PIP flexion tendon) comprised of tendons IF**3**E and IF**3**F to control extension and flexion at the PIP joint (IPIP, IF**3**).

[0230] The intermediate portion **118** of the frame **112** contains the actuator **132** that controls abduction and adduction at the MCP joint (IMCP, IF**1**) and is coupled to tendon portions IF**1**ABD and IF**1**ADD. The tendon portions IF**1**ABD and IF**1**ADD are also referred to as IF**1**E and IF**1**F. The intermediate portion **118** of the frame **112** also contains the actuator **132** that controls flexion and extension at the MCP joint (IMCP, IF**2**) and is coupled to tendon portions IF**2**E and IF**2**F. The distal portion **116** of the frame **112** contains the actuator **132** that controls flexion and extension at the PIP joint (IPIP, IF**3**) and is coupled to tendon portions IF**3**E and IF**3**F.

ii. Middle Finger—MF

[0231] The middle finger **210***b* is controlled by at least two tendons **610**: (i) a first tendon (may also be referred to as an index middle tendon, middle MCP tendon, or, if separated, an middle MCP extension tendon and middle MCP flexion tendon) comprised of tendon portions MF**2**E and MF**2**F to control abduction and adduction at the MCP joint (MMCP, MF**2**) and (ii) a second tendon (may also be referred to as an middle medial tendon, middle PIP tendon, or, if separated, an middle PIP extension tendon and middle PIP flexion tendon) comprised of tendon portions MF**3**E and MF**3**F to control extension and flexion at the PIP joint (MPIP, MF**3**). The distal portion **116** of the frame **112** contains the actuator **132** that controls flexion and extension at the MCP joint (MMCP, MF**2**) and is coupled to tendon MF**2**E and MF**2**F. The distal portion **116** of the frame **112** also contains the actuator **132** that controls flexion and extension at the PIP joint (MPIP, MF**3**) and is coupled to tendon MF**3**E and MF**3**F.

iii. Ring and Little Fingers—RF, LF

[0232] The ring finger **210***c* and the little finger **210***d* are both controlled by a single tendon comprised of: (i) tendon portions RLF**3**E and RLF**3**F, (ii) tendon portions RF**3**E and LF**3**E, and (iii) tendon portions RF**3**F and LF**3**F. In alternative embodiments, the ring finger **210***c* and the little finger **210***d* may be controlled by separate tendons for each finger. The distal portion **116** of the frame **112** contains the actuator **132** that controls flexion and extension at the PIP joint (RPIP, RLF**3**) and is coupled to tendon portions RLF**3**E and RLF**3**F. The tendon portions RLF**3**E and RLF**3**F are coupled to the slides **334.2**, **334.4** and routed back to the respective actuator **132**. Separate tendon portions RF**3**E/LF**3**E and RF**3**F/LF**3**F are routed around the respective wheel guides **336.2**, **336.4** to the fingers **210***c*, **210***d*. One end RF**3**E of the tendon RF**3**E/LF**3**E is routed to the ring finger **210***c*, and the other end LF**3**E of the tendon portion RF**3**E/LF**3**E is routed to the little finger **210***d*. Similarly, For the other tendon portion RF**3**F/LF**3**F, one end RF**3**F is routed to the ring finger **210***c*, and the other end LF**3**F is routed to the little finger **210***d*.

iv. Thumb—TH

[0233] The thumb **400** is controlled by at least three tendons **610**: (i) a first tendon (may also be referred to as a thumb ABD/ADD tendon or, if separated, an thumb ABD tendon and thumb ADD tendon) comprised of tendon portions TH**1**ABD and TH**1**ADD to control abduction and adduction at the TTM joint (TTM, TH**1**), (ii) a second tendon (may also be referred to as an TCMC tendon, or, if separated, an TCMC extension tendon and TCMC flexion tendon) comprised of portions TH**2**E and TH**2**F to control extension and flexion at the TCMC joint (TCMC, TH**2**), and (iii) a third tendon (may also be referred to as an TMCP tendon, or, if separated, an TMCP extension tendon and TMCP flexion tendon) comprised of portions TH**3**E, and TH**3**F to control extension and flexion at the TMCP joint (TMCP, TH**3**). The proximal portion **120** of the frame **112** contains the actuator **134** that controls abduction and adduction at the TTM joint (TTM, TH**1**) and is coupled to tendon portions TH**1**ABD and TH**1**ADD. The tendon portions TH**1**ABD and TH**1**ADD are also referred to as TH**1**E and TH**1**F. The proximal portion **120** of the frame **112** also contains the actuator **134** that controls flexion and extension at the TCMC joint (TCMC, TH**2**) and is coupled to tendon portions TH**2**E and TH**2**F. The intermediate portion **118** of the frame **112** contains the actuator **132** that controls flexion and extension at the TMCP joint (TMCP, TH**3**) and is coupled to tendon portions TH**3**E and TH**3**F.

v. Wrist—WR

[0234] The wrist assembly **550** is controlled by at least two tendons: (i) a first tendon (may also be referred to as an yaw tendon, or, if separated, an yaw max tendon and yaw min tendon) comprised of tendon portions WRYAB and WRYAD that controls yaw (WY) of the wrist assembly **550** and (ii) a second tendon (may also be referred to as an pitch tendon, or, if separated, an pitch max tendon and pitch min

tendon) comprised of tendon portions WRPE and WRPF to control pitch (WP) of the wrist assembly **550**. The intermediate portion **118** of the frame **112** contains the actuator **134** that controls yaw (WY) and is coupled to tendon portions WRYAB and WRYAD. The proximal portion **120** of the frame **112** contains the actuator **134** that controls pitch (WP) and is coupled to tendon portions WRPE and WRPF.

b. Tendon Routing Structures

[0235] The tendon routing structures (e.g., a spool frame **640**, a spool **644**, a pulley system **650**, a wrist tendon routing structure **560**) are configured to route the tendons **610** from components of the hand assembly **200**, through the wrist assembly **550**, and to the respective actuators **130** in the forearm assembly **110**. To interact with these tendons **610**, the above-disclosed actuators **132**, **134** have been modified to include a spool frame **640**, a spool **644**, and a pulley system **650** (e.g., spindles **651**, pulleys or cable guides **652**, **654**, sliding members **656**, biasing members **658**). The spool **644** is attached to the output shaft **131.4** of the cycloidal gearing, and an end of the tendon **610** is wrapped around the spool **644**. The spool frame **640** may surround and protect portions of the pulley system **650** and the tendon **610**. The spool **644** has projections **644.2** and grooves **644.4** formed therein that guide the tendon **610** when it is wound around the spool **644**.

[0236] As shown in FIGS. **5-9** and **46**, the pulley system **650** includes (i) spindles **651**, (ii) first pulleys **652**, (iii) second pulleys **654**, (iv) sliding members **656**, and (v) biasing members **658**. The spindles **651** are rotatably coupled to the spool frame **640** and arranged parallel with the spool **644**. As shown in the disclosed embodiment, the first pulley **652** may be in a fixed location, while the second pulley **654** may be in a non-fixed location. The first pulleys **652** are rotatably coupled to the spool frame **640** on either side of the actuator **130**, adjacent to one of the spindles **651**. The second pulleys **654** are rotatably coupled to sliding members **656**, which allow the second pulleys **654** to move up and down within a channel **656.2** formed in the side of the actuator housing **131.12**. In further embodiments, the second pulley **654** may be in a fixed location, and the first pulley **652** may be in a non-fixed location.

[0237] The sliding members **656** are configured to slide relative to the respective actuator **130** within the channel **656.2** formed in the actuator housing **131.12**. The biasing members **658** (e.g., a spring, an alternative linear elastic element, and/or a nonlinear elastic element) are arranged between the sliding member **656** and the actuator housing **131.12** within the respective channel **656.2**. The sliding member **656** is biased downward or away from the end effector **200** by the corresponding biasing member **658**, which may be any known mechanism, including a coil spring. As such, a first biasing member **658.2** on one actuator **130** is configured to apply a first biasing force F_1 on the first tendon **610.2**, and a second biasing member **658.4** on a different actuator **130** is configured to apply a second biasing force F_2 on the second tendon **610.4**. Preferably, the first biasing force F_1 is about equal to the second biasing force F_2, but the first biasing force F_1 may be different from the second biasing force F_2 in some embodiments. The combination of the sliding member **656** and the corresponding biasing member **658** is designed to provide compliance within the system to help increase the durability of the end effector **200**. In other words, when an external force is applied to the end effector **200**, one or more sliding members **656** can move within their respective channels **656.2**, thereby causing the corresponding second pulley **654** to move up or down relative to the base of the hand housing **300**. This movement allows the system to absorb the external force to the end effector **200** without causing the tendons **610** with corresponding biasing members **656** to break. In other embodiments, the second pulley **654** may be fixed and may not be able to slide within the channel **656.2**.

[0238] The tendon **610** extends tangentially away from the spool **644** to the spindle **651**, which is positioned substantially parallel with said spool **644**. The spindle **651** includes a concave profile to help position the tendon **610** properly to engage the first pulley **652**. The first pulley **652** causes the tendon **610** to turn 90 degrees towards the motor portion of the rotary actuator **132**, **134**. The tendon **610** then passes through the second pulley **654**, which turns it 180 degrees so that the tendon **610** is directed back towards the cycloidal gear side of the actuator **132**, **134**. From the second pulley **654**, the tendon **610** then extends to the wrist tendon routing structure **560** in the wrist assembly **550**.

[0239] Once the tendon **610** reaches the wrist tendon routing structure **560**, then one of the pulleys **564.4** on the respective bushing sub-assembly **564** enables the tendon **610** to bend 90 degrees inward towards the center of the wrist assembly **550**. Once around said pulley **564.4**, the tendon **610** is positioned within one of the guide channels **562.4** formed in the routing plate **562**. As shown in FIGS. **39** and **41**, the guide channel **562.4** in the wrist tendon routing structure **560** is not linear but is instead a complex structure with multiple curvatures in two different planes. In other embodiments, any other pulley configuration can be used. In some embodiments, the spool **644** can have a spiral groove **644.2**, and a line feeding system can be attached to the spool frame **640** to align the line with the guide channel **562.4**, ensuring that the line does not overlap any line already wrapped on the spool **644**.

[0240] The tendons **610** (specifically, IF**1**ABD, IF**1**ADD, IF**2**E, IF**2**F, IF**3**E, IF**3**F, MF**2**E, MF**2**F, MF**3**E, MF**3**F, RLF**3**E, RLF**3**F, TH**1**ABD, TH**1**ADD, TH**2**E, TH**2**F, TH**3**E, TH**3**F, WRPE, WRPF) are routed through one of the pulleys **564.4** to bend 90 degrees inward towards the center of the wrist assembly **550** to be routed through the center aperture **562.2** in the routing plate **562**. The wrist yaw tendons WRYAB and WRYAD are routed through one of the pulleys **564.4** but do not bend 90 degrees inward. Instead, the wrist yaw tendons WRYAB and WRYAD extend from the pulleys **564.4** to the housing coupling component **552** to control the yaw component **554**.

[0241] Once each tendon **610** exits the wrist tendon routing structure **560** through the center aperture **562.2** at the center of said tendon routing structure **560**, each tendon **610** is positioned within a corresponding sheath **615**. Said sheaths **615** include a first extent that is positioned within the carpal tunnel-like structure, (ii) a second extent that extends towards the finger assembly, and (iii) a third extent that extends towards the wrist assembly. Each tendon **610** then continues through its sheath **615**, through the opening **370.1** in the carpal tunnel-like structure **370**, through the cavity **310.2.10**, into an upper extent of the hand housing **300**, and to the respective finger assemblies **210***a-d*. As shown FIG. **35**, the opening in an upper extent of the hand housing **300**, where the tendons **610** enter into said hand housing **300** from the finger assemblies **210***a-d*, has a first distance D_{P1}, while a lower-middle extent of the hand housing **300** includes the

narrowing cavity **310.2.10**, where the tendons are most compressed, which has a second distance D_{P2}. This second distance D_{P2} extends between two interior curvilinear surfaces, wherein the first interior curvilinear surface **310.2.8.2.2** is associated with the thumb **400**, and a second interior curvilinear surface **310.2.6.2** is associated with either the little finger **210***d*, the ring finger **210***c*, the finger coupler **330**, or a combination thereof. The second distance D_{P2} is less than 45% of the first distance D_{P1}, and preferably less than 35% of the first distance D_{P1}. Also, the third distance D_{P3} may be greater than 15% of the second distance D_{P2}, and preferably greater than 25% of the second distance D_{P2}. The carpal tunnel-like structure **370** is configured to route the tendons **610** (via the opening **370.1**) through the narrow section of the hand housing **300** into the cavity **310.2.10**.

[0242] Also, as shown in FIG. **35** and to facilitate the routing of the tendons **610**, the sheaths **615** extend from the finger and thumb assemblies **210***a-d*, **400**, into an upper extent of the hand housing **300**, through the narrowing cavity **310.2.10**, and into the tunnel structure **370**. As such, a sheath **615** may include a jogged configuration, wherein a first sheath **615** may have a first jog distance D_{J1} and a second sheath **615** may have a second jog distance D_{J2}. Said second jog distance D_{J2} may be substantially less than the first jog distance D_{J1}, and both the first and second jog distances D_{J2}, D_{J2} may be less than 70% of the first distance D_{P1}, and may be greater than 30% of the first distance D_{P1}.

[0243] The sheaths **615** may have a tubular configuration and may be made from materials such as polytetrafluoroethylene (PTFE), ultra-high molecular weight polyethylene, UHMWPE, polyether ether ketone, PEEK, polyimide, Nylon, polyamide, Nylon 6, Nylon 6/6, Nylon 11, Nylon 12, filled polyamide, Acetal, polyoxymethylene, POM, polyethylene, PE, high-density polyethylene, HDPE, low-density polyethylene, LDPE, polypropylene, P_P, silicone polymer, silicone rubber, thermoplastic elastomer, TPE, thermoplastic polyurethane, TPU, thermoplastic polyester elastomer, TPEE, copolyester elastomer, styrenic block copolymer elastomer, TPE-S, thermoplastic vulcanizate, TPE-V, polyamide elastomer, TPE-A, polyurethane, PU, polyvinyl chloride, PVC, fiber-reinforced polymer, FRP, carbon fiber composite, carbon fiber reinforced polymer, fiberglass composite, glass fiber reinforced polymer, GFRP, aramid fiber composite, aramid fiber reinforced polymer, spider silk composite, wear-resistant alloy, Hardox steel, Ultimet alloy, shape memory alloy, SMA, Nitinol, stainless steel, self-healing polymer, conductive polymer, piezoelectric polymer, polyvinylidene fluoride, PVDF, diamond-like carbon coating, DLC coating, PTFE coating, molybdenum disulfide coating, MoS2 coating. In other embodiments, the sheaths **615** may be omitted, or their length may be reduced.

[0244] Once each tendon **610** reaches the upper extent of the hand housing **300**, it can now interact with the following components, structures, and/or parts of its associated finger assembly **210***a-d*. As shown in the Figures, there are eleven tendon loops **610**, wherein each tendon loop **610** is comprised of: (i) an extension side (denoted as an "E") and an opposed flexion side (denoted as an "F"), or (ii) an abduction side (denoted as an "ABD") and an opposed adduction side (denoted as an "ADD"). For ease of reference, Applicant has color-coded the tendons for ease of reference. In particular, the extension/adduction side of the tendon **610** is shown in blue, and the flexion/abduction side is shown in red (see. e.g., FIGS. **55**, **57-61**, **63-67**, **69-73**, **76-78**, and **83**). While the following disclosure focuses on the index finger, it should be understood that this disclosure is equally applicable to other fingers. Additionally, while the disclosed tendons **610** are described as being a continuous loop, it should be understood that the sides of the loop can be split into separate and distinct tendons.

[0245] As shown in FIGS. **54**, **58**, **60**, the IF**2**F tendon (flexion), shown in red, controls flexion at the first (MCP) joint. The IF**2**F tendon **610** is routed through the lower portion **224.6** of the support base **224** of the knuckle assembly **220**, through one of the cable guide slots **262.2** on the exterior of the bottom member **252**, and is attached to a first ball **630** that is received in the ball recess **272.8.2** of the second slot **272.8** of the proximal member **272**. As shown in FIGS. **55**, **57**, and **61**, the opposing side of the IF**2**F tendon or the IF**2**E tendon (extension), is shown in blue and controls extension at the first (MCP) joint. Said IF**2**E tendon **610** is attached to a second ball **630** that is positioned in the ball recess **272.6.2** and is routed through one of the cable guide slots **246.2** on the exterior of the top member **242** of the knuckle assembly **220** and returns through the upper portion **224.4** of the support base **224**.

[0246] Each of the IF**2**F and IF**2**E tendons have an actuator ball **631** that is coupled to the opposite end from the ball **630**. The actuator ball **631** is attached to the respective actuator **130** housed in the forearm assembly **110** like as shown in FIG. **9**. This connects the IF**2**F and IF**2**E tendons to the actuator **130**. In other embodiments, the blue and red portions of the tendon loop **610** are joined at the actuator ball **631** to create a tendon loop, and the actuator ball **631** is coupled to the actuator **130** housed in the forearm assembly **110**.

[0247] FIGS. **55**, **57**, **61**, **63**, and **66** show the IF**3**F tendon (flexion), shown in red, which is configured to control flexion at the second (PIP) joint. Said IF**3**F tendon is routed through the lower portion **224.6** of the support base **224** of the knuckle assembly **220**, through the cable guide slots **262.2** on the exterior of the bottom member **252**, into the first slot **272.6** of the proximal member **272**, then over the wheels **282** of the proximal member **272**, and into the bottom guide slot **292.2.4.6**, with its attached first ball **630** seated in the bottom ball seat **292.2.4.8**. Likewise, the IF**3**E tendon (extension), shown in FIGS. **54**, **58**, **60**, **64**, and **67** in blue, is configured to control the extension at the second (PIP) joint. Said IF**3**E tendon is attached to a second ball **630** in the top ball seat **292.2.4.4**, routed through the top guide slot **292.2.4.2**, through the second slot **272.8** of the proximal member **272**, then through the cable guide slots **246.2** on the exterior of the top member **242** of the knuckle assembly **220**, and returns through the upper portion **224.4** of the support base **224**.

[0248] Each of the IF**3**F and IF**3**E tendons have an actuator ball **631** that is coupled to the opposite end from the ball **630**. The actuator ball **631** is attached to the respective actuator **130** housed in the forearm assembly **110** like as shown in FIG. **9**. This connects the IF**3**F and IF**3**E tendons to the actuator **130**. In other embodiments, the blue and red portions of the tendon **610** are joined at the actuator ball **631** to create a tendon loop, and the actuator ball **631** is coupled to the actuator **130** housed in the forearm assembly **110**.

[0249] A similar routing to the second (PIP) finger joint of the ring finger **210***c* and little finger **210***d* can be modified so that flexion of the second (PIP) finger joints of the ring finger **210***c* and little finger **210***d* are coupled together and exten-

sion of the second (PIP) finger joints of the ring finger **210***c* and little finger **210***d* are coupled together, and each coupled action indirectly causes bending in the first (MCP) finger joint. As shown in FIGS. **85-87**, the finger coupler **330** includes the track **332** with the track channels **332.2**, **332.4**, the slides **334.2**, **334.4**, and the wheel guides **336.2**, **336.4** coupled to either the bottom slide **334.2** or the top slide **334.4**. A cable portion (e.g., RLF**3**E, RLF**3**F) is coupled between the slides **334.2**, **334.4** and the assigned actuator **134** in the forearm assembly **110**. The cables or tendons RLF**3**E, RLF**3**F are coupled to the respective slide **334.2**, **334.4** and extend through guide channels **332.6.2**, **332.6.4**. The top wheel guide **336.4** is configured to hold a u-shaped cable (e.g., RF**3**E, LF**3**E) with balls **630** on each end, where one cable portion (RF**3**E) follows the blue path for the ring finger **210***c* and the other (LF**3**E) follows the blue path for the little finger **210***d*. Similarly, the bottom wheel guide **336.2** is configured to hold a u-shaped cable (e.g., RF**3**F, LF**3**F), where one cable portion (RF**3**F) follows the red path for the ring finger **210***c* and the other (LF**3**F) follows the red path for the little finger **210***d*. Thus, the movement of both fingers **210***c*, **210***d* is coupled, and flexion and extension of the second (PIP) finger joints are controlled by the movement of the slides **334.2**, **334.4**.

[0250] FIGS. **48** and **50-52** show the IF**1**ABD and IF**1**ADD tendons that control adduction (shown in blue) and abduction (shown in red) at the first (MCP) finger joint of the index finger **210***a*. The IF**1**ABD and IF**1**ADD tendons **610** are guided in the cable recess **244.4**, and an attached ball **630** is retained in the ball seat **244.6** of the top member **242** of the knuckle enclosure **240**. As shown in FIGS. **50-52**, the IFABD tendon **610** is routed through the center portion **224.2** of the support base **224** of the knuckle assembly **220**, through one of the cable passageway **224.8.2**, and is attached to a ball **630** located in the ball seat **244.6**. As shown in FIGS. **50-52**, the IFADD tendon **610** is routed through the center portion **224.2** of the support base **224** of the knuckle assembly **220**, through the other cable passageway **224.8.2**, and is attached to the ball **630** located in the ball seat **244.6**.

[0251] FIGS. **48** and **51** illustrate the index finger **210***a* in an uncurled state. The tendon **610** is routed through the cable passageways **224.8.2** in the support base **224** with an attached ball **630** positioned to be received in the knuckle enclosure **240**, and specifically in ball seat **244.6** of the top member **242**. In this configuration, the tendon **610** is configured to move the finger assembly **210***a* for abduction and adduction.

[0252] FIGS. **44**, **45**, and **67**A-**67**D illustrate a first tendon **610.2** has a first total curvature or bentness over the length of the tendon in the uncurled state, wherein the first total curvature is a summation of absolute curvature values of said tendon **610.2**. For example, the first total curvature or bentness of MCP extension tendon (blue) shown in FIG. **67**B includes the summation of: (i) the first partial curvature value C_{UME1} associated with a first extent of the tendon that extends from the edge of the finger assembly to line L_{UME1}, and (ii) the second partial curvature value C_{UME2} associated with a second extent of the tendon that extends from line L_{UME1} to the end or ball. The first tendon **610.4** has a second total curvature or bentness over the length of the tendon in the uncurled state, wherein the second total curvature is a summation of absolute curvature values of said tendon **610.4**. Specifically, the second total curvature or bentness of PIP extension tendon (blue) shown in FIG. **67**A includes the summation of: (i) the first partial curvature value C_{UPE1} associated with a first extent of the tendon that extends from the edge of the finger assembly to line L_{UPE1}, and (ii) the second partial curvature value C_{UPE2} associated with a second extent of the tendon that extends from line L_{UPE1} to the end or ball. Here, it can be seen that the first total curvature or bentness of MCP extension tendon (blue) is less than the second total curvature or bentness of PIP extension tendon (blue).

[0253] The first or third total curvature or bentness of MCP flexion tendon (red) shown in FIG. **67**A includes the summation of: (i) the first partial curvature value C_{UMF1} associated with a first extent of the tendon that extends from the edge of the finger assembly to line L_{UMF1}, and (ii) the second partial curvature value C_{UMF2} associated with a second extent of the tendon that extends from line L_{UMF1} to the end or ball. The second or fourth total curvature or bentness of PIP flexion tendon (red) shown in FIG. **67**B includes the summation of: (i) the first partial curvature value C_{UPF1} associated with a first extent of the tendon that extends from the edge of the finger assembly to line L_{UPF1}, (ii) the second partial curvature value C_{UPF2} associated with a second extent of the tendon that extends from line L_{UPF1} to line L_{UPF2}, (iii) the third partial curvature value C_{UPF3} associated with a third extent of the tendon that extends from line L_{UPF2} to line L_{UPF3}, (iv) the fourth partial curvature value C_{UPF4} associated with a fourth extent of the tendon that extends from line L_{UPF3} to line L_{UPF4}, (v) the fifth partial curvature value C_{UPF5} associated with a fifth extent of the tendon that extends from line L_{UPF4} to line L_{UPF5}, (vi) the sixth partial curvature value C_{UPF6} associated with a sixth extent of the tendon that extends from line L_{UPF5} to line L_{UPF6}, (vii) the seventh partial curvature value C_{UPF7} associated with a seventh extent of the tendon that extends from line L_{UPF6} to line L_{UPF7}, and (ix) the eighth partial curvature value C_{UPE8} associated with a eighth extent of the tendon that extends from line L_{UPE7} to the end or ball. Here, it can be seen that the first or third total curvature or bentness of MCP flexion tendon (red) is less than the second or fourth total curvature or bentness of PIP flexion tendon (red).

[0254] As shown in FIGS. **67**C and **67**D, the curvature of each tendon changes as the finger assembly moves from the uncurled state to a curled state. In comparison to the uncurled state, the total curvature or bentness of MCP extension tendon (blue) increases in the curled state. Specifically, the total curvature of the MCP extension tendon (blue) in the curled state includes the summation of: (i) the first partial curvature value C_{CME1} associated with a first extent of the tendon that extends from the edge of the finger assembly to line L_{CME1}, and (ii) the second partial curvature value C_{CME2} associated with a second extent of the tendon that extends from line L_{CME1} to the end or ball. Likewise and in comparison to the uncurled state, the total curvature or bentness of PIP extension tendon (blue) increases in the curled state. Specifically, the total curvature of the PIP extension tendon (blue) in the curled state includes the summation of: (i) the first partial curvature value C_{CPE1} associated with a first extent of the tendon that extends from the edge of the finger assembly to line L_{CPE1}, (ii) the second partial curvature value C_{CPE2} associated with a second extent of the tendon that extends from line L_{CPE1} to line L_{CPE2}, (iii) the third partial curvature value C_{CPE3} associated with a third extent of the tendon that extends from line L_{CPE2} to line L_{CPE3}, and (iv) the fourth partial curvature

value C_{CPE4} associated with a fourth extent of the tendon that extends from line L_{CPE3} the end or ball.

[0255] Also and in comparison to the uncurled state, the total curvature or bentness of MCP flexion tendon (red) decreases in the curled state. Specifically, the total curvature of the MCP flexion tendon (red) in the curled state includes the first partial curvature value C_{CMF1} associated with a first extent of the tendon that extends from the edge of the finger assembly to the end or ball. It should be noted that the first partial curvature value C_{CMF1} of the MCP flexion tendon (red) in the curled state is equal to zero in this exemplary embodiment. Likewise and in comparison to the uncurled state, the total curvature or bentness of PIP flexion tendon (red) decreases in the curled state. Specifically, the total curvature of the PIP flexion tendon (red) in the curled state includes the summation of: (i) the first partial curvature value C_{CPF1} associated with a first extent of the tendon that extends from the edge of the finger assembly to line L_{CPF1}, (ii) the second partial curvature value C_{CPF2} associated with a second extent of the tendon that extends from line L_{CPF1} to line L_{CPF2}, (iii) the third partial curvature value C_{CPF3} associated with a third extent of the tendon that extends from line L_{CPF2} to line L_{CPF3}, (iv) the fourth partial curvature value C_{CPF4} associated with a fourth extent of the tendon that extends from line L_{CPF3} to line L_{CPF4}, and (v) the fifth partial curvature value C_{CPF5} associated with a fifth extent of the tendon that extends from line L_{CPF4} to the end or ball. It should be understood that the above described and shown curvatures are only for a portion of each tendon and do not represent the total curvature; nevertheless, the same principles that are shown here can be used to calculate the total curvature for any tendon contained within the end effector. Furthermore, it should be understood that the total curvature can be measured in mm^{-1}, while other measurement units are contemplated by this disclosure.

[0256] It may be desirable to reduce the curvature of the tendon if the application of force needed from said tendon needs to increase, or if the acceleration of the reaction of said tendon needs to increase, and/or if the usage of said tendon needs to increase. For example, it may be desirable to use a tendon that includes less curvature for a movement of the end effector **200** that needs more force than other movements. Specifically, it may be desirable to have the tendons WRYAB, WRYAD, WRPE, WRPF that move the wrist **550** include less curvature than the tendons RLF**3**E, RLF**3**F that move the little finger. In another example, it may be desirable for a second tendon (associated with am extent of a finger **210***a-d*, e.g., IF**3**E, IF**3**F, MF**2**E, MF**2**F, MF**3**E, MF**3**F, RLF**3**E, RLF**3**F) **610.4** to have a second curvature that is greater than a first curvature of a first tendon (associated with an extent of the thumb **400**, e.g., TH**1**E, TH**1**F, TH**2**E, TH**2**F) **610.2**, when the application of force that is associated with the second tendon **610.4** is less than the application of force associated with the first tendon **610.2**. In a further example, it may be desirable for a second tendon **610.4** to have a second curvature that is greater than the first curvature of the first tendon **610.2**, when the frequency of use associated with the second tendon **610.4** is less than the frequency of use associated with the first tendon **610.2**. Finally, it may be desirable for a second tendon **610.4** to have a second curvature that is greater than the first curvature of the first tendon **610.2**, when the acceleration need associated with the second tendon **610.4** is less than the acceleration need associated with the first tendon **610.2**.

[0257] FIGS. **37-38** illustrate a portion of the tendon assembly **600** at the wrist assembly **550** for yaw of the hand assembly **200**. FIGS. **88** and **89** show different views of one end of a tendon **610** with a ball **630** received into the ball seat or catch **554.10.2** of the yaw component **554**, and the cable is guided by the cable guide **554.8.2** around the front of the yaw component **554**. The tendon **610** is routed around the pulleys **652**, **654** and spindles **651** of an actuator, e.g., H1 actuator **132**, as discussed above. Additionally, the opposed end of the tendon **610**, including a ball **630**, is received into the ball catch **554.10.4** on the opposite side of the yaw component **554**, and the cable is guided by the cable guide **554.8.4** around the front of the yaw component **554**, completing the loop.

c. Movement of the Tendons

[0258] Movement of the joints of the hand assembly **200** is disclosed in connection with FIGS. **47-83**, and movement of the joints of the wrist assembly **550** is disclosed in connection with FIGS. **90-93**. For example, FIG. **50** shows the change in position (adduction) due to counter-clockwise movement of the ball **630**, which moves a finger **210** (e.g., the index finger **210***a*). FIG. **52** shows the change in position (abduction) due to clockwise movement of the ball **630**, which also moves the finger (e.g., index finger **210***a*). In another example, FIGS. **57** and **58** show the tendon position for a 45 degree bend at the MCP joint. Additionally, FIGS. **60** and **61** show the tendon position for a 90 degree bend at the MCP joint. In another example, FIGS. **63** and **64** show the tendon positions for a 90 degree bend at the PIP joint. In another example, FIGS. **66** and **67** show the tendon positions for a 90 degree bend at the MCP joint and a 90 degree bend at the PIP joint.

[0259] One example of how the index finger **210***a* moves based on the movement of the IF**2** actuator **134** is described below. It should be understood that this is only exemplary and can apply the same or similarly to other fingers. The rotational or angular movement of the IF**2** actuator **134** will cause the finger to move towards or away from the hand housing **300**. This rotational or angular movement of the IF**2** actuator causes: (i) a first extent of the IF**2** flexion tendon (red tendon) to be wrapped around the actuator spool **644**, (ii) a second extent of the IF**2** flexion tendon to be pulled across the routing plate **562**, (iii) a third extent of the IF**2** flexion tendon to move through a sheath **615** within the opening **370.1** of the carpal tunnel-like structure **370** and the lower extent of the hand **200**, (iv) a fourth extent of the IF**2** flexion tendon to move through the cable passageways **224.8.6** of the knuckle support **222**, and specifically the third set of passageways **224.8.6**, (v) a fifth extent of the IF**2** flexion tendon to move across an extent of the knuckle assembly **220**, and specifically the cable guide slots **262.2**, (vi) a first extent of the IF**2** extension tendon (blue tendon) to be pulled across an extent of the knuckle assembly **220**, and specifically the cable guide slots **246.2**, (vii) a second extent of the IF**2** extension tendon to move through the cable passageways **224.8.2** of the knuckle support **222**, and specifically the first set of passageways **224.8.2**, (viii) a third extent of the IF**2** extension tendon to move through another sheath **615** within the opening **370.1** of the carpal tunnel-like structure **370** and lower extent of the hand, (ix) a fourth extent of the IF**2** extension tendon to be pulled across the routing plate **562**, and (x) a fifth extent of the IF**2** extension tendon to be unwrapped from the actuator spool **644**.

5. Elbow Assembly and Hand Twist Assembly

[0260] As shown in FIGS. **94-97**, the illustrative embodiment of the elbow assembly **150** includes: (i) an elbow frame **152** and (ii) an output mount assembly **154**. The elbow frame **152** is configured structurally to support the forearm assembly **110** and the attached hand assembly **200**. The output mount assembly **154** is configured to interface with the direct-drive actuator **136**, which is coupled in the proximal mounting portion **120** of the forearm frame **112**.

[0261] As shown in FIGS. **94** and **95**, the elbow frame **152** includes: (i) an attachment portion **156** and (ii) an output mount receiving portion **158**. The attachment portion **156** is configured to secure the lower arm assembly **28**, **1028** to the robot **1**, **1001** and includes a mounting ring **156.2** with a plurality of apertures **156.4** for receiving fasteners that couple the elbow assembly **150** to the elbow actuator (J**4**). The output mount receiving portion **158** is configured to receive the output mount assembly **154** and includes a mounting ring **158.2** with a plurality of apertures **158.4** for fasteners that couple the output mount assembly **154** to the output mount receiving portion **158** of the elbow frame **152**.

[0262] As shown in FIGS. **95** and **96**, the output mount assembly **154** includes: (i) a twist bearing **162**, (ii) an outer retaining ring **164**, (iii) an inner retaining ring **166**, (iv) an encoder ring **168**, and (v) a slotted spur gear **170**. The inner retaining ring **166** can include a hardstop **166.2**, a plurality of mounting holes **166.4**, and a central hub **166.6** with a keyed slot **166.8** facing the hardstop **166.2**. The direct-drive actuator (i.e., non-tendon based) actuator **136** has an output gear **136.2** fixed to its output shaft that engages the slotted spur gear **170**. The elbow end portion **122** of the forearm frame **112** can include end stops **122.6** within its interior portion **122.2** that are configured to interact with the hardstop **166.2** of the output mount assembly **154** of the elbow assembly **150**. The encoder ring **168** can include a rotary sensor for measuring rotational position and velocity. Although the illustrative embodiment of the output mount assembly **154** is configured for a specific actuator, other configurations adapted for alternate actuators can be relied on for twist rotation of the lower arm and hand.

[0263] In the illustrative embodiment, the elbow assembly **150** is assembled by positioning the outer retaining ring **164** of the output mount assembly **154** around the mounting ring **158.2** of the output mount receiving portion **158** of the elbow frame **152**, and sliding the twist bearing **162** onto the mounting ring **158.2**. The inner retaining ring **166** is oriented on the mounting ring **158.2** in a selected position for a left or right side lower arm assembly **28**, **1028**, where the hardstop **166.2** on the inner retaining ring **166** limits motion at the maximum and minimum rotation. For example, with the attachment portion **156** of the elbow frame **152** facing upward, the hardstop **166.2** of the inner retaining ring **166** can be oriented at +90 degrees from the top (i.e., the 3 o'clock position) for a left side assembly, or oriented at −90 degrees from the top (i.e., the 9 o'clock position) for a right side assembly. The inner retaining ring **166** is coupled to the mounting ring **158.2** of the output mount receiving portion **158** by aligning the plurality of mounting holes **166.4** of the inner retaining ring **166** with the plurality of apertures **158.4** of the mounting ring **158.2**, with the hardstop **166.2** oriented in the selected position. The encoder ring **168** can include an indicator configured to align with the hardstop **166.2** to ensure proper orientation for the sensor readings of the related movements. The encoder ring **168** is secured around the central hub **166.6** of the inner retaining ring **166**. The slotted spur gear **170** is coupled to the central hub **166.6** with the slot of the slotted spur gear **170** aligned with the keyed slot **166.8** of the central hub **166.6**.

[0264] The elbow assembly **150** is configured to couple to the forearm assembly **110** and receive output from the direct-drive actuator **136** to twist the forearm and hand. In the illustrative embodiment, the outer retaining ring **164** of the output mount assembly **154** of the elbow assembly **150** is coupled to the elbow end portion **122** of the forearm frame **112**. For example, the outer retaining ring **164** can include interior threaded portions **164.2** configured to couple with an exterior threaded portion **122.4** of the forearm frame **112**. To prevent over-rotation, prior to coupling, the elbow assembly **150** is positioned such that the hardstop **166.2** of the inner retaining ring **166** of the output mount assembly **154** is positioned between the two end stops **122.6** of the forearm frame **112**, defining the rotation limits of the forearm assembly **110**. The direct-drive actuator **136** is housed in the proximal mounting portion **120** of the forearm frame **112** and positioned such that the output gear **136.2** of the direct-drive actuator **136** is meshed with the slotted spur gear **170** of the output mount assembly **154**. The direct-drive actuator **136** drives rotational movement (clockwise or counter-clockwise) of the forearm assembly **110** with respect to the elbow assembly **150** via the slotted spur gear **170** and inner retaining ring **166**, where the hardstop **166.2** on the inner retaining ring **166** limits the twist or rotational movement of the forearm assembly **110** when the hardstop **166.2** contacts either end stop **122.6** of the forearm frame **112**. The minimum and maximum twist movements are shown in FIGS. **96** and **97**.

D. Alternative Embodiments

[0265] It should be understood that this disclosure contemplates a multitude of alternative designs for the robot, a combination of its assemblies (e.g., an arm), its individual assemblies (e.g., a lower arm assembly), a combination of its parts or components (e.g., a plurality of actuators), and/or any individual part or component (e.g., a tendon or cable). To this extent, it should be recognized that any assembly, combination of assemblies, part, component, or combination thereof from any embodiment disclosed herein may be combined with any other assembly, combination of assemblies, part, component, or combination thereof. Accordingly, the detailed description shall not be interpreted as limited to a specific disclosed embodiment. Instead, this application should be construed according to how one of ordinary skill in the art would interpret, understand, build, or configure the robot, its assemblies, its components, or any part thereof, based on their knowledge and the information disclosed in this Application.

[0266] In one embodiment, the disclosed tendons **610** are manually tensioned for operation. As an alternative to manually tensioning the tendons **610**, the tendons **610** may be tensioned by controlling a corresponding actuator **132**, **134** using a processor that executes a tensioning algorithm. In particular, the processor may command the actuator **132**, **134** to turn until an associated strain or torque reading exceeds a predefined threshold. Once this threshold is met, the processor may stop the actuator, and an installer may then tighten a locking mechanism (e.g., one or more screws) to secure the tendon **610** in the desired position. This

controlled method for setting the tension in the tendons **610** simplifies manufacturing and ensures a reliable configuration.

[0267] In an alternative embodiment, instead of being routed on the exterior of the forearm frame **112**, the tendons **610** may be routed on the interior of the forearm frame **112**. As shown in FIGS. **3** and **95**, the pulleys **652**, **654** are positioned on the exterior of the actuator assembly. In other embodiments, the pulleys **652**, **654** may be positioned on the interior of the actuator assembly. While this configuration may complicate the assembly process, it may also minimize potential damage to the tendons **610**. Instead of using only rotary actuators, the lower arm assembly may include linear actuators, hydraulics, pneumatics, piezoelectric actuators, or any other type of mechanism capable of controlling the extension and contraction of the hand components. Additionally, it should be understood that this alternative embodiment contemplates a hybrid approach that may include a combination of linear actuators, hydraulics, pneumatics, piezoelectric actuators, and rotary actuators.

[0268] The tendons **610** may be configured as a continuous (i.e., looped) tendon that extends from a point on the finger assembly **210** to the actuator **132**, **134** and returns to the finger assembly **210** without being cut, broken, or segmented. In other embodiments, the tendon **610** may be segmented into two separate and distinct components-namely, an extension tendon and a flexion tendon. In this embodiment, the extension tendon runs from the finger assembly to the actuator **132**, **134** in a single piece, and the flexion tendon runs from the finger assembly to the actuator **132**, **134** in a single piece. In other embodiments, additional segments (e.g., three or more segments) may be included in each tendon. This design may reduce the assembly's ability to properly apply tension between the extension and flexion of the finger. However, it may simplify the manufacturing and repair of the robot or its sub-assemblies.

[0269] As disclosed herein, the medial-distal assembly **290** of a finger **210** includes a distal end portion **292.4** that is affixed at a defined external angle (e.g. 135 degrees) relative to the medial portion **292.6** at the third finger joint or distal interphalangeal (DIP) joint. In alternative embodiments, the angle between these portions **292.4** and **292.6** may be increased to a value between 136 degrees and 180 degrees or reduced to a value between 134 degrees and 45 degrees. Additionally, the neutral angle (e.g., 180 degrees) between the proximal assembly **270** and the medial-distal assembly **290** may be increased to a value greater than 180 degrees or reduced to a value between 179 degrees and 45 degrees. If the angle between the proximal assembly **270** and the medial-distal assembly **290** is modified, it should be understood that this modified angle may be calculated in the uncurled state. Accordingly, the second finger joint or proximal interphalangeal (PIP) joint may have the same range of motion as disclosed above. The only change is the starting or neutral position contained in this range of motion. In a further embodiment, the angle between the distal end portion **292.4** and the medial portion **292.6** may be reduced, and the angle between the proximal assembly **270** and the medial-distal assembly **290** may be increased. In this embodiment, the uncurled state of the finger assembly might have a slight curvature that is distributed across a larger extent of the finger assembly in comparison to the curvature that is shown in the finger assembly disclosed in the Figures of this application.

[0270] In other embodiments, the little finger **210***d* may be omitted from the hand assembly **200**. The omission of the little finger **210***d* reduces the complexity of the hand by omitting the need to tie or couple the movement of the ring finger **210***c* with said little finger **210***d*.

[0271] In another embodiment, at least one movement associated with the ring finger **210***c* may be tied or coupled with a movement of the middle finger **210***b*. For example, as the movement of the little finder **210***d* is tied to the ring finger **210***c* as described above. For example, the movement of the medial-distal assembly **290** of each finger may be tied or coupled to one another. In coupling this movement together, an actuator from the forearm assembly **110** may be omitted, or the degree of freedom may be moved to another joint (e.g., abduction/adduction of the little finger **210***d*, flexion/extension of the first or metacarpophalangeal (MCP) joint of the ring finger **210***c*). In another embodiment, the hand may include only two joints, instead of the three joints as disclosed in the Figures. In other words, the hand may omit the fixed distal interphalangeal (DIP) joint.

[0272] In a further embodiment, the actuator that controls the rotation of the wrist may be removed from the forearm assembly **110**. Instead, this movement may be relocated to a position between the forearm assembly **110** and the elbow joint. Removing this actuator from the forearm assembly **110** will allow either: (i) the omission of an actuator, which in turn allows the size of the forearm assembly **110** to be reduced, or (ii) the designer to add another degree of freedom to the hand assembly **200**. Examples of where the design may include an extra degree of freedom include: (i) untying or decoupling the little finger **210***d* from the ring finger **210***c*, (ii) adding abduction/adduction of the little finger **210***d*, (iii) adding flexion/extension of the first or metacarpophalangeal (MCP) joint of the ring finger **210***c*, or (iv) adding flexion/extension of the first or metacarpophalangeal (MCP) joint of the little finger **210***d*.

[0273] Instead of using a tendon-only approach for the hand assembly **200**, it should be understood that an alternative embodiment of the hand assembly may include a combination of tendon-based actuators and non-tendon-based actuators. In this embodiment, the following movements/joints, or any combination thereof, may be controlled using a non-tendon-based actuator: (i) wrist yaw, (ii) wrist pitch, (iii) abduction/adduction of any finger (e.g., index finger **210***a*), (iv) flexion/extension of any joint contained in any finger (e.g., the second or proximal interphalangeal (PIP) joint of the little finger **210***d*), (*v*) abduction/adduction of the thumb **400**, and/or (vi) flexion/extension of any joint contained in the thumb **400**. The non-tendon-based actuators may utilize: (i) linear actuators and/or rotary actuators (e.g., that include worm drives), or (ii) a combination of linkages to form a component or assembly that is underactuated, and/or the omission of linkages. The addition of non-tendon-based actuators may allow for a reduction in the size of the forearm assembly **110** or an increase in the degrees of freedom of the hand assembly **200**. Examples of where the design may include an extra degree of freedom include: (i) untying or decoupling the little finger **210***d* from the ring finger **210***c*, (ii) adding abduction/adduction of the first or metacarpophalangeal (MCP) joint of the little finger **210***d*, (iii) adding flexion/extension of the first or metacarpophalangeal (MCP) joint of the ring finger **210***c*, or (iv) adding flexion/extension of the first or metacarpophalangeal (MCP) joint of the little finger **210***d*.

[0274] In a further embodiment, one tendon may be omitted from each finger or each movable joint contained in each finger. The omitted tendon may be replaced with a spring (e.g., compression springs or torsion springs) or another mechanism (e.g., torsion springs or living hinges) that is designed to force the finger or thumb into, or to return to, a desired or preset configuration. For example, the extension tendon may be omitted. In this example, the spring or another mechanism may be designed to force the finger or thumb into an uncurled state. The actuator can then act on the flexion tendon to close the finger or thumb, allowing it to grasp an object. To close the finger or thumb, the actuator must overcome the biasing force applied by the spring or other mechanism. Once the robot has finished grasping the object, it can reduce the force on the tendon, thereby allowing the spring or other mechanism to return the finger or thumb to the uncurled state. While this configuration does not omit actuators, it simplifies manufacturing and assembly. Likewise, the flexion tendon may be omitted, and the spring or another mechanism may be designed to force the finger or thumb into a closed or curled state.

[0275] Instead of relying on a processor that runs a tensioning algorithm, the system could employ a closed-loop feedback mechanism with force sensors on the tendons to adjust tension to a target value automatically. Alternatively, optical sensing can be used to measure tendon deflection and ensure proper tension. A more straightforward manual tensioning approach can also be employed, with a calibrated torque wrench ensuring consistent force application. Beyond traditional tendon-driven designs, many actuation technologies may be integrated to power the hand's movements. Shape memory alloy wires, for instance, contract when heated, while electroactive polymer artificial muscles can flex under electrical stimulation. In other embodiments, the continuous loop tendon approach may be revised to use separate tendons for flexion and extension with adjustable turnbuckles, implement a differential pulley system to balance tension, or incorporate inline spring elements for compliance and shock absorption. Finger joint angles can be customized by using modular segments with standardized interfaces, installing adjustable stop mechanisms to achieve precise range-of-motion limits, or 3D printing finger components with patient-specific angles. Further, hybrid actuation systems that combine tendon-driven motion with small electric motors at the joints may enable fine-grained control. Finger segments may also be 3D printed from gradient materials to strategically place stiffer polymers at high-stress points and more flexible polymers at bending regions.

[0276] The lower arm assembly may include a protective covering or a glove **180** that is positioned over an extent of the forearm, wrist, and end effector or hand. In other embodiments, the protective covering may only be positioned over the wrist and end effector. In further embodiments, the protective covering may only extend over the hand. The type of protective covering may be selected based on the specific tasks to be performed by the robot in its designated operating environment. For specific operating environments, the robot's hands may include protective coverings as a barrier against heat, cold, electrical shock, liquids, dust, chemicals, and mechanical damage (e.g., cuts, punctures, abrasions). For other operating environments, the robot's hands may include protective coverings with padding. For yet other operating environments, the hands of the robot may include protective coverings with a deformable or adherent material to provide a better grip. The protective coverings can include underlying padding that may be glued to a substrate or over-molded. The choice of materials may be customized based on the specific use case or may include a common multi-layer approach for padding across multiple use cases. For example, the padding can be made from thermoplastic polyurethane (TPU) foam, ethylene propylene diene monomer (EPDM), solid silicone, or polyurethane. In one example, TPU foam can be used alone or in combination with a blend of other rubbers. Specifically, EPDM may be used to make the padding softer and stickier. In some examples, a very soft silicone core may be used with a tough polyurethane skin over the outside.

[0277] Another contemplated embodiment involves a modular architecture for the forearm assembly **110**. Rather than integrating actuators **130** directly into distinct portions **116**, **118**, **120** of the forearm frame **112**, the frame or an exoskeleton housing structure could be designed with standardized receptacles or bays configured to accept self-contained actuator modules or cartridges. Each module could encapsulate one or more actuators (which may be of the disclosed H1/H2 rotary type or alternative designs), associated control electronics (e.g., portions of the electronics package **140**), and standardized interfaces for mechanical fixation, power transmission, data communication, and coupling to the downstream transmission system (e.g., tendon terminators, linkage pivots, fluidic ports). Such modularity could significantly simplify manufacturing, assembly, maintenance, and repair processes by enabling the rapid swapping of actuator units. It could also facilitate customization or upgrades, allowing a user to install modules with different performance characteristics (e.g., varying torque output, speed, or precision) based on application requirements.

[0278] The disclosed actuators **132**, **134** may be replaced with a dual-disc cycloidal drive configuration. In such a design, two cycloidal discs **131.22** could be driven by the input motor, operating approximately 180 degrees out of phase with each other. This provides inherent cancellation of primary imbalance forces, which may enable smoother operation, albeit possibly at the expense of increased actuator length or component count. Control fidelity and interaction capabilities may be enhanced by incorporating additional sensing modalities within the actuator structure. For example, torque sensors could be integrated into the actuator's output stage, downstream from the cycloidal reduction mechanism, to provide a direct measurement of the torque being delivered to the load (e.g., a tendon or joint). This enables more precise force control and may potentially compensate for transmission elasticity or friction. Furthermore, the disclosed actuators **132**, **134** could incorporate mechanisms for actively varying the gear reduction ratio (e.g., by adjusting the eccentricity 'e' using controllable elements), allowing the actuator to adapt its speed-torque characteristics to different phases of a task or varying operating conditions.

[0279] Further embodiments may replace or supplement fixed mechanical coupling between fingers (such as the described coupling of the ring finger **210***c* and little finger **210***d* via coupler **330**, or the potential coupling of the ring finger **210***c* and middle finger **210***b*) with dynamic, software-controlled coupling. In such a configuration, additional actuators **130** and corresponding tendon loops **610** could be provided to grant independent control over previously coupled or fixed joints (e.g., providing independent MCP

flexion/extension for the ring and little fingers, and independent PIP flexion/extension for the ring and little fingers). The control system processor could then execute algorithms to virtually couple the motion of selected joints or fingers based on the task context. This could involve mimicking the combined ring/little finger motion for power grasps, enabling independent motion for fine manipulation or tasks such as typing, or creating other synergistic movements as needed. This approach increases hardware requirements (actuators, tendons, routing complexity) but offers significantly greater kinematic flexibility and adaptability compared to fixed mechanical linkages.

[0280] In other embodiments, miniature compliant elements could be utilized, such as integrated elastomer segments within the tendon **610** itself, small spring-damper units incorporated near the MCP or PIP joints (e.g., integrated into the knuckle assembly **220** or proximal assembly **270** structures), or flexural elements within the joint bearings/pins **264**, **266** themselves. Such distributed compliance may enhance shock absorption during impacts, provide more stable passive grasping, allow for better conformance to object surfaces, and potentially enable more natural, less rigid interactions with the environment.

[0281] In further embodiments, the palm structure, described primarily via the palm frame **310**, may be modified to incorporate articulation or compliance. Instead of a fully rigid frame, segments of the palm structure could be interconnected by passive compliant joints or even limited-range active joints driven by dedicated tendons or local actuators. This could allow the palm itself to change shape slightly, for example, by deepening the transverse palmar arch to improve grip stability on cylindrical objects, or by flattening to manipulate planar objects more effectively. Such palmar articulation, mimicking aspects of human hand flexibility, could enhance grip adaptability and stability for a wider variety of object shapes and sizes without necessarily increasing the complexity or degrees of freedom of the fingers **210** or thumb **400**.

1. Alternative Embodiment #1

[0282] The alternative embodiment of the hand assembly features 8 degrees of freedom (DoF). The index finger **210***a* has 2 DoF: (i) abduction/adduction at the first or metacarpophalangeal (MCP) joint and (ii) flexion/extension of the second or proximal interphalangeal (PIP) joint. The middle finger **210***b* has 1 DoF: (i) flexion/extension of the second or proximal interphalangeal (PIP) joint. The ring finger **210***c* has 1 DoF: (i) flexion/extension of the second or proximal interphalangeal (PIP) joint. The little finger **210***d* has 1 DoF: (i) flexion/extension of the second or proximal interphalangeal (PIP) joint. The thumb **400** has 3 DoF: (i) abduction/adduction of the first thumb joint or trapeziometacarpal (TM) joint, (ii) flexion/extension of the second thumb joint or carpometacarpal (CMC) joint, and (iii) flexion/extension of the third thumb joint or metacarpophalangeal (MCP) joint.

2. Alternative Embodiment #2

[0283] The alternative embodiment of the hand assembly features 8 degrees of freedom (DoF). The index finger **210***a* has 3 DoF: (i) abduction/adduction at the first or metacarpophalangeal (MCP) joint, (ii) flexion/extension of the first or metacarpophalangeal (MCP) joint, and (iii) flexion/extension of the second or proximal interphalangeal (PIP) joint. The middle finger **210***b*, the ring finger **210***c*, and the little finger **210***d* all have a combined 1 DoF: (i) flexion/extension of the second or proximal interphalangeal (PIP) joint. The thumb **400** has 2 DoF: (i) abduction/adduction of the first thumb joint or trapeziometacarpal (TM) joint and (ii) flexion/extension of the third thumb joint or metacarpophalangeal (MCP) joint.

3. Alternative Embodiment #3

[0284] The alternative embodiment of the hand assembly features 9 degrees of freedom (DoF). The index finger **210***a* has 3 DoF: (i) abduction/adduction at the first or metacarpophalangeal (MCP) joint, (ii) flexion/extension of the first or metacarpophalangeal (MCP) joint, and (iii) flexion/extension of the second or proximal interphalangeal (PIP) joint. The middle finger **210***b* has 2 DoF: (i) flexion/extension of the first or metacarpophalangeal (MCP) joint and (ii) flexion/extension of the second or proximal interphalangeal (PIP) joint. The ring finger **210***c* and little finger **210***d* have a combined 1 DoF: (i) flexion/extension of the second or proximal interphalangeal (PIP) joint. The thumb **400** has 3 DoF: (i) abduction/adduction of the first thumb joint or trapeziometacarpal (TM) joint, (ii) flexion/extension of the second thumb joint or carpometacarpal (CMC) joint, and (iii) flexion/extension of the third thumb joint or metacarpophalangeal (MCP) joint.

4. Alternative Embodiment #4

[0285] The alternative embodiment of the hand assembly features 9 degrees of freedom (DoF). The index finger **210***a* has 3 DoF: (i) abduction/adduction at the first or metacarpophalangeal (MCP) joint, (ii) flexion/extension of the first or metacarpophalangeal (MCP) joint, and (iii) flexion/extension of the second or proximal interphalangeal (PIP) joint. The middle finger **210***b*, the ring finger **210***c*, and the little finger **210***d* all have a combined 1 DoF: (i) flexion/extension of the second or proximal interphalangeal (PIP) joint. The thumb **400** has 3 DoF: (i) abduction/adduction of the first thumb joint or trapeziometacarpal (TM) joint, (ii) flexion/extension of the second thumb joint or carpometacarpal (CMC) joint, and (iii) flexion/extension of the third thumb joint or metacarpophalangeal (MCP) joint.

5. Alternative Embodiment #5

[0286] The alternative embodiment of the hand assembly features 9 degrees of freedom (DoF). The index finger **210***a* has 3 DoF: (i) abduction/adduction at the first or metacarpophalangeal (MCP) joint, (ii) flexion/extension of the first or metacarpophalangeal (MCP) joint, and (iii) flexion/extension of the second or proximal interphalangeal (PIP) joint. The middle finger **210***b* and the ring finger **210***c* have a combined 1 DoF: (i) flexion/extension of the second or proximal interphalangeal (PIP) joint. The little finger **210***d* has 2 DoF: (i) abduction/adduction at the first or metacarpophalangeal (MCP) joint and (ii) flexion/extension of the second or proximal interphalangeal (PIP) joint. The thumb **400** has 3 DoF: (i) abduction/adduction of the first thumb joint or trapeziometacarpal (TM) joint, (ii) flexion/extension of the second thumb joint or carpometacarpal (CMC) joint, and (iii) flexion/extension of the third thumb joint or metacarpophalangeal (MCP) joint.

6. Alternative Embodiment #6

[0287] The alternative embodiment of the hand assembly features 9 degrees of freedom (DoF). The index finger **210***a* has 2 DoF: (i) abduction/adduction at the first or metacarpophalangeal (MCP) joint and (ii) flexion/extension of the second or proximal interphalangeal (PIP) joint. The middle finger **210***b* has 1 DoF: (i) flexion/extension of the second or proximal interphalangeal (PIP) joint. The ring finger **210***c* has 1 DoF: (i) flexion/extension of the second or proximal interphalangeal (PIP) joint. The little finger **210***d* has 2 DoF: (i) abduction/adduction at the first or metacarpophalangeal (MCP) joint and (ii) flexion/extension of the second or proximal interphalangeal (PIP) joint. The thumb **400** has 3 DoF: (i) abduction/adduction of the first thumb joint or trapeziometacarpal (TM) joint, (ii) flexion/extension of the second thumb joint or carpometacarpal (CMC) joint, and (iii) flexion/extension of the third thumb joint or metacarpophalangeal (MCP) joint.

7. Alternative Embodiment #7

[0288] The alternative embodiment of the hand assembly features 9 degrees of freedom (DoF). The index finger **210***a* has 3 DoF: (i) abduction/adduction at the first or metacarpophalangeal (MCP) joint, (ii) flexion/extension of the first or metacarpophalangeal (MCP) joint, and (iii) flexion/extension of the second or proximal interphalangeal (PIP) joint. The middle finger **210***b* has 1 DoF: (i) flexion/extension of the second or proximal interphalangeal (PIP) joint. The ring finger **210***c* has 1 DoF: (i) flexion/extension of the second or proximal interphalangeal (PIP) joint. The little finger **210***d* has 2 DoF: (i) abduction/adduction at the first or metacarpophalangeal (MCP) joint and (ii) flexion/extension of the second or proximal interphalangeal (PIP) joint. The thumb **400** has 2 DoF: (i) abduction/adduction of the first thumb joint or trapeziometacarpal (TM) joint and (ii) flexion/extension of the third thumb joint or metacarpophalangeal (MCP) joint.

8. Alternative Embodiment #8

[0289] The alternative embodiment of the hand assembly features 10 degrees of freedom (DoF). The index finger **210***a* has 3 DoF: (i) abduction/adduction at the first or metacarpophalangeal (MCP) joint, (ii) flexion/extension of the first or metacarpophalangeal (MCP) joint, and (iii) flexion/extension of the second or proximal interphalangeal (PIP) joint. The middle finger **210***b* has 2 DoF: (i) flexion/extension of the first or metacarpophalangeal (MCP) joint and (ii) flexion/extension of the second or proximal interphalangeal (PIP) joint. The ring finger **210***c* has 1 DoF: (i) flexion/extension of the second or proximal interphalangeal (PIP) joint. The little finger **210***d* has 1 DoF: (i) flexion/extension of the second or proximal interphalangeal (PIP) joint. The thumb **400** has 3 DoF: (i) abduction/adduction of the first thumb joint or trapeziometacarpal (TM) joint, (ii) flexion/extension of second thumb joint or carpometacarpal (CMC) joint, and (iii) flexion/extension of third thumb joint or metacarpophalangeal (MCP) joint.

9. Alternative Embodiment #9

[0290] The alternative embodiment of the hand assembly features 10 degrees of freedom (DoF). The index finger **210***a* has 3 DoF: (i) abduction/adduction at the first or metacarpophalangeal (MCP) joint, (ii) flexion/extension of the first or metacarpophalangeal (MCP) joint, and (iii) flexion/extension of the second or proximal interphalangeal (PIP) joint. The middle finger **210***b* has 1 DoF: (i) flexion/extension of the second or proximal interphalangeal (PIP) joint. The ring finger **210***c* has 1 DoF: (i) flexion/extension of the second or proximal interphalangeal (PIP) joint. The little finger **210***d* has 2 DoF: (i) abduction/adduction at the first or metacarpophalangeal (MCP) joint and (ii) flexion/extension of the second or proximal interphalangeal (PIP) joint. The thumb **400** has 3 DoF: (i) abduction/adduction of the first thumb joint or trapeziometacarpal (TM) joint, (ii) flexion/extension of the second thumb joint or carpometacarpal (CMC) joint, and (iii) flexion/extension of the third thumb joint or metacarpophalangeal (MCP) joint.

10. Alternative Embodiment #10

[0291] The alternative embodiment of the hand assembly features 10 degrees of freedom (DoF). The index finger **210***a* has 3 DoF: (i) abduction/adduction at the first or metacarpophalangeal (MCP) joint, (ii) flexion/extension of the first or metacarpophalangeal (MCP) joint, and (iii) flexion/extension of the second or proximal interphalangeal (PIP) joint. The middle finger **210***b* has 1 DoF: (i) flexion/extension of the second or proximal interphalangeal (PIP) joint. The ring finger **210***c* has 1 DoF: (i) flexion/extension of the second or proximal interphalangeal (PIP) joint. The little finger **210***d* has 3 DoF: (i) abduction/adduction at the first or metacarpophalangeal (MCP) joint, (ii) flexion/extension of the first or metacarpophalangeal (MCP) joint, and (iii) flexion/extension of the second or proximal interphalangeal (PIP) joint. The thumb **400** has 3 DoF: (i) abduction/adduction of the first thumb joint or trapeziometacarpal (TM) joint, (ii) flexion/extension of the second thumb joint or carpometacarpal (CMC) joint, and (iii) flexion/extension of the third thumb joint or metacarpophalangeal (MCP) joint.

11. Alternative Embodiment #11

[0292] The alternative embodiment of the hand assembly features 11 degrees of freedom. The index finger **210***a* has 3 DoF: (i) abduction/adduction at the first or metacarpophalangeal (MCP) joint, (ii) flexion/extension of the first or metacarpophalangeal (MCP) joint, and (iii) flexion/extension of the second or proximal interphalangeal (PIP) joint. The middle finger **210***b* has 2 DoF: (i) flexion/extension of the first or metacarpophalangeal (MCP) joint and (ii) flexion/extension of the second or proximal interphalangeal (PIP) joint. The ring finger **210***c* has 2 DoF: (i) flexion/extension of the first or metacarpophalangeal (MCP) joint and (ii) flexion/extension of the second or proximal interphalangeal (PIP) joint. The little finger **210***d* has 2 DoF: (i) abduction/adduction at the first or metacarpophalangeal (MCP) joint and (ii) flexion/extension of the second or proximal interphalangeal (PIP) joint. The thumb **400** has 2 DoF: (i) abduction/adduction of the first thumb joint or trapeziometacarpal (TM) joint and (ii) flexion/extension of the second thumb joint or carpometacarpal (CMC) joint.

12. Alternative Embodiment #12

[0293] The alternative embodiment of the hand assembly features 12 degrees of freedom. The index finger **210***a* has 3 DoF: (i) abduction/adduction at the first or metacarpopha-

langeal (MCP) joint, (ii) flexion/extension of the first or metacarpophalangeal (MCP) joint, and (iii) flexion/extension of the second or proximal interphalangeal (PIP) joint. The middle finger **210***b* has 2 DoF: (i) flexion/extension of the first or metacarpophalangeal (MCP) joint and (ii) flexion/extension of the second or proximal interphalangeal (PIP) joint. The ring finger **210***c* has 2 DoF: (i) flexion/extension of the first or metacarpophalangeal (MCP) joint and (ii) flexion/extension of the second or proximal interphalangeal (PIP) joint. The little finger **210***d* has 2 DoF: (i) abduction/adduction at the first or metacarpophalangeal (MCP) joint, (ii) flexion/extension of the first or metacarpophalangeal (MCP) joint, and (iii) flexion/extension of the second or proximal interphalangeal (PIP) joint. The thumb **400** has 3 DoF: (i) abduction/adduction of the first thumb joint or trapeziometacarpal (TM) joint, (ii) flexion/extension of the second thumb joint or carpometacarpal (CMC) joint, and (iii) flexion/extension of the third thumb joint or metacarpophalangeal (MCP) joint.

13. Alternative Embodiment #13

[0294] The alternative embodiment of the hand assembly features 15 degrees of freedom (DoF). The index finger **210***a* has 4 DoF: (i) abduction/adduction at the first or metacarpophalangeal (MCP) joint, (ii) flexion/extension of the first or metacarpophalangeal (MCP) joint, (iii) flexion/extension of the second or proximal interphalangeal (PIP) joint, and (iv) flexion/extension of the third or distal interphalangeal (DIP) joint. The middle finger **210***b* and the ring finger **210***c* each have 2 DoF: (i) flexion/extension of the first or metacarpophalangeal (MCP) joint and (ii) flexion/extension of the second or proximal interphalangeal (PIP) joint. The little finger **210***d* has 4 DoF: (i) abduction/adduction at the first or metacarpophalangeal (MCP) joint, (ii) flexion/extension of the first or metacarpophalangeal (MCP) joint, (iii) flexion/extension of the second or proximal interphalangeal (PIP) joint, and (iv) flexion/extension of the third or distal interphalangeal (DIP) joint. The thumb **400** has 3 DoF: (i) abduction/adduction of the first thumb joint or trapeziometacarpal (TM) joint, (ii) flexion/extension of the second thumb joint or carpometacarpal (CMC) joint, and (iii) flexion/extension of the third thumb joint or metacarpophalangeal (MCP) joint.

14. Alternative Embodiment #14

[0295] The alternative embodiment of the hand assembly features 17 degrees of freedom. The index finger **210***a* has 4 DoF: (i) abduction/adduction at the first or metacarpophalangeal (MCP) joint, (ii) flexion/extension of the first or metacarpophalangeal (MCP) joint, (iii) flexion/extension of the second or proximal interphalangeal (PIP) joint, and (iv) flexion/extension of the third or distal interphalangeal (DIP) joint. The middle finger **210***b* has 3 DoF: (i) flexion/extension of the first or metacarpophalangeal (MCP) joint, (ii) flexion/extension of the second or proximal interphalangeal (PIP) joint, and (iii) flexion/extension of the third or distal interphalangeal (DIP) joint. The ring finger **210***c* has 3 DoF: (i) flexion/extension of the first or metacarpophalangeal (MCP) joint, (ii) flexion/extension of the second or proximal interphalangeal (PIP) joint, and (iii) flexion/extension of the third or distal interphalangeal (DIP) joint. The little finger **210***d* has 4 DoF: (i) abduction/adduction at the first or metacarpophalangeal (MCP) joint, (ii) flexion/extension of the first or metacarpophalangeal (MCP) joint, (iii) flexion/extension of the second or proximal interphalangeal (PIP) joint, and (iv) flexion/extension of the third or distal interphalangeal (DIP) joint. The thumb **400** has 3 DoF: (i) abduction/adduction of the first thumb joint or trapeziometacarpal (TM) joint, (ii) flexion/extension of the second thumb joint or carpometacarpal (CMC) joint, and (iii) flexion/extension of the third thumb joint or metacarpophalangeal (MCP) joint.

15. Alternative Embodiment #15

[0296] The alternative embodiment of the hand assembly features 17 degrees of freedom. The index finger **210***a* has 4 DoF: (i) abduction/adduction at the first or metacarpophalangeal (MCP) joint, (ii) flexion/extension of the first or metacarpophalangeal (MCP) joint, (iii) flexion/extension of the second or proximal interphalangeal (PIP) joint, and (iv) flexion/extension of the third or distal interphalangeal (DIP) joint. The middle finger **210***b* and the ring finger **210***c* each has 4 DoF: (i) abduction/adduction at the first or metacarpophalangeal (MCP) joint, (ii) flexion/extension of the first or metacarpophalangeal (MCP) joint, (iii) flexion/extension of the second or proximal interphalangeal (PIP) joint, and (iv) flexion/extension of the third or distal interphalangeal (DIP) joint. The little finger **210***d* has 2 DoF: (i) abduction/adduction at the first or metacarpophalangeal (MCP) joint and (ii) flexion/extension of the first or metacarpophalangeal (MCP) joint. The thumb **400** has 3 DoF: (i) abduction/adduction of the first thumb joint or trapeziometacarpal (TM) joint, (ii) flexion/extension of second thumb joint or carpometacarpal (CMC) joint, and (iii) flexion/extension of third thumb joint or metacarpophalangeal (MCP) joint.

16. Alternative Embodiment #16

[0297] The alternative embodiment of the hand assembly features 18 degrees of freedom. The index finger **210***a* has 4 DoF: (i) abduction/adduction at the first or metacarpophalangeal (MCP) joint, (ii) flexion/extension of the first or metacarpophalangeal (MCP) joint, (iii) flexion/extension of the second or proximal interphalangeal (PIP) joint, and (iv) flexion/extension of the third or distal interphalangeal (DIP) joint. The middle finger **210***b* and the ring finger **210***c* each have 4 DoF: (i) abduction/adduction at the first or metacarpophalangeal (MCP) joint, (ii) flexion/extension of the first or metacarpophalangeal (MCP) joint, (iii) flexion/extension of the second or proximal interphalangeal (PIP) joint, and (iv) flexion/extension of the third or distal interphalangeal (DIP) joint. The little finger **210***d* has 2 DoF: (i) abduction/adduction at the first or metacarpophalangeal (MCP) joint, (ii) flexion/extension of the first or metacarpophalangeal (MCP) joint, and (iii) flexion/extension of the second or proximal interphalangeal (PIP) joint. The thumb **400** has 3 DoF: (i) abduction/adduction of the first thumb joint or trapeziometacarpal (TM) joint, (ii) flexion/extension of the second thumb joint or carpometacarpal (CMC) joint, and (iii) flexion/extension of the third thumb joint or metacarpophalangeal (MCP) joint.

17. Alternative Embodiment #17

[0298] The alternative embodiment of the hand assembly has 18 DoF. The index finger **210***a* has 4 DoF: (i) abduction/adduction at the first or metacarpophalangeal (MCP) joint, (ii) flexion/extension of the first or metacarpophalangeal

(MCP) joint, (iii) flexion/extension of the second or proximal interphalangeal (PIP) joint, and (iv) flexion/extension of the third or distal interphalangeal (DIP) joint. The middle finger **210***b* and the ring finger **210***c* each have 4 DoF: (i) abduction/adduction at the first or metacarpophalangeal (MCP) joint, (ii) flexion/extension of the first or metacarpophalangeal (MCP) joint, (iii) flexion/extension of the second or proximal interphalangeal (PIP) joint, and (iv) flexion/extension of the third or distal interphalangeal (DIP) joint. The little finger **210***d* has 3 DoF: (i) abduction/adduction at the first or metacarpophalangeal (MCP) joint, (ii) flexion/extension of the first or metacarpophalangeal (MCP) joint, and (iii) flexion/extension of the second or proximal interphalangeal (PIP) joint. The thumb **400** has 4 DoF: (i) abduction/adduction of the first thumb joint or trapeziometacarpal (TM) joint, (ii) flexion/extension of the second thumb joint or carpometacarpal (CMC) joint, (iii) flexion/extension of the third thumb joint or metacarpophalangeal (MCP) joint, and (iv) flexion/extension of the third or distal interphalangeal (DIP) joint.

18. Alternative Embodiment #18

[0299] This alternative embodiment of the hand assembly has 20 DoF. The index finger **210***a* has 4 DoF: (i) abduction/adduction at the first or metacarpophalangeal (MCP) joint, (ii) flexion/extension of the first or metacarpophalangeal (MCP) joint, (iii) flexion/extension of the second or proximal interphalangeal (PIP) joint, and (iv) flexion/extension of the third or distal interphalangeal (DIP) joint. The middle finger **210***b*, the ring finger **210***c*, and the little finger **210***d* each have 4 DoF: (i) abduction/adduction at the first or metacarpophalangeal (MCP) joint, (ii) flexion/extension of the first or metacarpophalangeal (MCP) joint, (iii) flexion/extension of the second or proximal interphalangeal (PIP) joint, and (iv) flexion/extension of the third or distal interphalangeal (DIP) joint. The thumb **400** has 4 DoF: (i) abduction/adduction of the first thumb joint or trapeziometacarpal (TM) joint, (ii) flexion/extension of the second thumb joint or carpometacarpal (CMC) joint, (iii) flexion/extension of the third thumb joint or metacarpophalangeal (MCP) joint, and (iv) flexion/extension of the third or distal interphalangeal (DIP) joint.

19. Alternative Embodiment #19

[0300] This alternative embodiment of the hand assembly has 22 DoF. The index finger **210***a* has 4 DoF: (i) abduction/adduction at the first or metacarpophalangeal (MCP) joint, (ii) flexion/extension of the first or metacarpophalangeal (MCP) joint, (iii) flexion/extension of the second or proximal interphalangeal (PIP) joint, and (iv) flexion/extension of the third or distal interphalangeal (DIP) joint. The middle finger **210***b*, the ring finger **210***c*, and the little finger **210***d* each have 4 DoF: (i) abduction/adduction at the first or metacarpophalangeal (MCP) joint, (ii) flexion/extension of the first or metacarpophalangeal (MCP) joint, (iii) flexion/extension of the second or proximal interphalangeal (PIP) joint, and (iv) flexion/extension of the third or distal interphalangeal (DIP) joint. The thumb **400** has 4 DoF: (i) abduction/adduction of the first thumb joint or trapeziometacarpal (TM) joint, (ii) flexion/extension of the second thumb joint or carpometacarpal (CMC) joint, (iii) flexion/extension of the third thumb joint or metacarpophalangeal (MCP) joint, and (iv) flexion/extension of the third or distal interphalangeal (DIP) joint. The hand housing **300** has 2 DoF: (i) flexion/extension of the little finger and (ii) flexion/extension of the thumb.

[0301] Any other combination of the above embodiments is also contemplated. It should also be understood that the degrees of freedom for any joint may be reduced by half if the joint is biased in one direction. For example, the hand may not include a degree of freedom for the extension of the third thumb joint or metacarpophalangeal (MCP) joint because said degree of freedom is replaced by a spring or another biasing member.

E. Industrial Application

[0302] While the disclosure shows illustrative embodiments of a robot (in particular, a humanoid robot), it should be understood that embodiments are designed to be examples of the principles of the disclosed assemblies, methods and systems, and are not intended to limit the broad aspects of the disclosed concepts to the embodiments illustrated. As will be realized, the disclosed robot, and its functionality and methods of operation, are capable of other and different configurations and several details are capable of being modified all without departing from the scope of the disclosed methods and systems. For example, one or more of the disclosed embodiments, in part or whole, may be combined with a disclosed assembly, method and system. As such, one or more steps from the diagrams or components in the Figures may be selectively omitted and/or combined consistent with the disclosed assemblies, methods and systems. Additionally, one or more steps from the arrangement of components may be omitted or performed in a different order. Accordingly, the drawings, diagrams, and detailed description are to be regarded as illustrative in nature, not restrictive or limiting, of said humanoid robot. It should be understood that the use of the word "or" when separating element names in connection with a single reference number indicates that the same structure can have two different names. For example, "end effector or hand assembly **200**" indicates that the structure **200** can either be referred to or claimed as an "end effector" or "hand assembly." In another example, the structure **114** can be referred to or claimed as "a wrist portion," "a distal end," or "a second end."

[0303] While the above-described methods and systems are designed for use with a general-purpose humanoid robot, it should be understood that the assemblies, components, learning capabilities, and/or kinematic capabilities may be used with other robots. Examples of other robots include: articulated robot (e.g., an arm having two, six, or ten degrees of freedom, etc.), a cartesian robot (e.g., rectilinear or gantry robots, robots having three prismatic joints, etc.), Selective Compliance Assembly Robot Arm (SCARA) robots (e.g., with a donut shaped work envelope, with two parallel joints that provide compliance in one selected plane, with rotary shafts positioned vertically, with an end effector attached to an arm, etc.), delta robots (e.g., parallel link robots with parallel joint linkages connected with a common base, having direct control of each joint over the end effector, which may be used for pick-and-place or product transfer applications, etc.), polar robots (e.g., with a twisting joint connecting the arm with the base and a combination of two rotary joints and one linear joint connecting the links, having a centrally pivoting shaft and an extendable rotating arm, spherical robots, etc.), cylindrical robots (e.g., with at least one rotary joint at the base and at least one prismatic joint

connecting the links, with a pivoting shaft and extendable arm that moves vertically and by sliding, with a cylindrical configuration that offers vertical and horizontal linear movement along with rotary movement about the vertical axis, etc.), self-driving car, a kitchen appliance, construction equipment, or a variety of other types of robot systems. The robot system may include one or more sensors (e.g., cameras, temperature, pressure, force, inductive or capacitive touch), motors (e.g., servo motors and stepper motors), actuators, biasing members, encoders, housing, or any other component known in the art that is used in connection with robot systems. Likewise, the robot system may omit one or more sensors (e.g., cameras, temperature, pressure, force, inductive or capacitive touch), motors (e.g., servo motors and stepper motors), actuators, biasing members, encoders, housing, or any other component known in the art that is used in connection with robot systems.

[0304] In other embodiments, other configurations and/or components may be utilized. As is known in the data processing and communications arts, a general-purpose computer typically comprises a central processor or other processing device, an internal communication bus, various types of memory or storage media (RAM, ROM, EEPROM, cache memory, disk drives etc.) for code and data storage, and one or more network interface cards or ports for communication purposes. The software functionalities involve programming, including executable code as well as associated stored data. The software code is executable by the general-purpose computer. In operation, the code is stored within the general-purpose computer platform. At other times, however, the software may be stored at other locations and/or transported for loading into the appropriate general-purpose computer system.

[0305] A server, for example, includes a data communication interface for packet data communication. The server also includes a central processing unit (CPU), in the form of one or more processors, for executing program instructions. The server platform typically includes an internal communication bus, program storage and data storage for various data files to be processed and/or communicated by the server, although the server often receives programming and data via network communications. The hardware elements, operating systems and programming languages of such servers are conventional in nature, and it is presumed that those skilled in the art are adequately familiar therewith. The server functions may be implemented in a distributed fashion on a number of similar platforms, to distribute the processing load.

[0306] Hence, aspects of the disclosed methods and systems outlined above may be embodied in programming. Program aspects of the technology may be thought of as "products" or "articles of manufacture" typically in the form of executable code and/or associated data that is carried on or embodied in a type of machine-readable medium. "Storage" type media includes any or all of the tangible memory of the computers, processors or the like, or associated modules thereof, such as various semiconductor memories, tape drives, disk drives and the like, which may provide non-transitory storage at any time for the software programming. All or portions of the software may at times be communicated through the Internet or various other telecommunication networks. Thus, another type of media that may bear the software elements includes optical, electrical and electromagnetic waves, such as used across physical interfaces between local devices, through wired and optical landline networks and over various air-links. The physical elements that carry such waves, such as wired or wireless links, optical links or the like, also may be considered as media bearing the software. As used herein, unless restricted to non-transitory, tangible "storage" media, terms such as computer or machine "readable medium" refer to any medium that participates in providing instructions to a processor for execution.

[0307] A machine-readable medium may take many forms, including but not limited to, a tangible storage medium, a carrier wave medium or physical transmission medium. Non-volatile storage media include, for example, optical or magnetic disks, such as any of the storage devices in any computer(s) or the like, such as may be used to implement the disclosed methods and systems. Volatile storage media include dynamic memory, such as the main memory of such a computer platform. Tangible transmission media include coaxial cables, copper wire and fiber optics, including the wires that comprise a bus within a computer system. Carrier-wave transmission media can take the form of electric or electromagnetic signals, or acoustic or light waves such as those generated during radio frequency (RF) and infrared (IR) data communications. Common forms of computer-readable media therefore include for example: a floppy disk, a flexible disk, hard disk, magnetic tape, any other magnetic medium, a CD-ROM, DVD or DVD-ROM, any other optical medium, punch cards, paper tape, any other physical storage medium with patterns of holes, a RAM, a PROM and EPROM, a FLASH-EPROM, any other memory chip or cartridge, a carrier wave transporting data or instructions, cables or links transporting such a carrier wave, or any other medium from which a computer can read programming code and/or data. Many of these forms of computer readable media may be involved in carrying one or more sequences of one or more instructions to a processor for execution.

[0308] It is to be understood that the invention is not limited to the exact details of construction, operation, exact materials or embodiments shown and described, as obvious modifications and equivalents will be apparent to one skilled in the art. While the specific embodiments have been illustrated and described, numerous modifications come to mind without significantly departing from the spirit of the invention, and the scope of protection is only limited by the scope of the accompanying Claims. In the drawings, some structural or method features may be shown in specific arrangements and/or orderings. However, it should be appreciated that such specific arrangements and/or orderings may not be required. Rather, in some embodiments, such features may be arranged in a different manner and/or order than shown in the illustrative figures. Additionally, the inclusion of a structural or method feature in a particular figure is not meant to imply that such feature is required in all embodiments and, in some embodiments, may not be included or may be combined with other features.

[0309] It should also be understood that the term "substantially" as utilized herein means a deviation less than 15% and preferably less than 5%. It should also be understood that the term "near" means within 10 cm, the term "proximate" means within 5 cm, and the term "adjacent" means within 1 cm. It should also be understood that other configurations or arrangements of the above described components are contemplated by this Application. Moreover, the

description provided in the background section should not be assumed to be prior art merely because it is mentioned in or associated with the background section. The background section may include information that describes one or more aspects of the subject of the technology. Finally, the mere fact that something is described as conventional does not mean that the Applicant admits it is prior art.

[0310] In this Application, to the extent any U.S. patents, U.S. patent applications, or other materials (e.g., articles) have been incorporated by reference, the text of such materials is only incorporated by reference to the extent that they do not conflict with materials, statements and drawings set forth herein. In the event of such conflict, the text of the present document controls, and terms in this document should not be given a narrower reading in virtue of the way in which those terms are used in other materials incorporated by reference. It should also be understood that structures and/or features not directly associated with a robot cannot be adopted or implemented into the disclosed humanoid robot without careful analysis and verification of the complex realities of designing, testing, manufacturing, and certifying a robot for completion of usable work nearby and/or around humans. Theoretical designs that attempt to implement such modifications from non-robotic structures and/or features are insufficient (and in some instances, woefully insufficient) because they amount to mere design exercises that are not tethered to the complex realities of successfully designing, manufacturing and testing a robot.

1. A humanoid robot, comprising:

an upper region including at least: (i) a head, (ii) a torso, (iii) an arm having: (a) an elbow assembly, (b) a forearm assembly, and (c) a wrist assembly, and wherein the forearm assembly includes:

a forearm frame includes: (i) a forearm axis that is substantially centered within an extent of the forearm frame, (ii) a proximal mounting portion including a proximal end coupled to an extent of the elbow assembly, (iii) a distal mounting portion including a distal end coupled to an extent of the wrist assembly,

a first plurality of actuators coupled to the proximal mounting portion and arranged radially around the forearm axis, and wherein a first actuator contained in the first plurality of actuators is in contact with a first tendon and includes a first tendon departure region,

a second plurality of actuators coupled to the distal mounting portion and arranged radially around the forearm axis, and wherein a second actuator contained in the second plurality of actuators is in contact with a second tendon and includes a second tendon departure region, and

wherein the first tendon departure region is at a first distance from the wrist assembly and the second tendon departure region is at a second distance from the wrist assembly, and wherein the first distance is not equal to the second distance;

a lower region spaced apart from the upper region and including a pair of legs; and,

a central region interconnecting the upper region and the lower region.

2. The humanoid robot of claim **1**, wherein the humanoid robot includes a non-tendon based actuator that is at least partially positioned between the elbow assembly and the distal end of the forearm frame.

3. The humanoid robot of claim **2**, wherein the non-tendon based actuator is a linear actuator.

4. The humanoid robot of claim **1**, further comprising a first biasing member configured to apply a first biasing force on the first tendon, and a second biasing member configured to apply a second biasing force on the second tendon.

5. The humanoid robot of claim **1**, wherein the first tendon has a first total curvature in an uncurled state, and the second tendon has a second total curvature that is greater than the first total curvature in the uncurled state, and wherein an application of force that is associated with the second tendon is less than the application of force associated with the first tendon.

6. The humanoid robot of claim **1**, wherein the first tendon has a first total curvature in an uncurled state, and the second tendon has a second total curvature that is greater than the first total curvature in the uncurled state, and wherein a frequency of use that is associated with the second tendon is less than a frequency of use associated with the first tendon.

7. The humanoid robot of claim **1**, further comprising: an end effector having a housing and a finger assembly, and (ii) a carpal tunnel-like structure configured to guide the first and second tendons from the forearm assembly, through the wrist assembly, and to a base of the housing.

8. The humanoid robot of claim **7**, further comprising a sheath having: (i) a first extent that is positioned within the carpal tunnel-like structure, (ii) a second extent that extends towards the finger assembly, and (iii) a third extent that extends towards the wrist assembly.

9. The humanoid robot of claim **1**, further comprising an end effector with less than 24 degrees of freedom, which are actuated by less than 20 motors.

10. The humanoid robot of claim **1**, wherein the proximal end of the forearm frame has a proximal perimeter that is larger than a distal perimeter of the distal end of the forearm frame.

11. A humanoid robot, comprising:

an upper region including: (i) a head, (ii) a torso, (iii) an arm coupled to the torso and including: (a) a forearm assembly, (b) a wrist assembly coupled to the forearm assembly, and (c) an end effector coupled to the wrist assembly, and wherein said end effector includes:

an index finger assembly,

a middle finger assembly positioned proximate to the index finger assembly,

a ring finger assembly positioned proximate to the middle finger assembly,

a little finger assembly positioned proximate to the ring finger assembly,

a thumb assembly,

a housing: (i) coupled to the index finger, middle finger, ring finger, little finger, and thumb assemblies, and (ii) having a base, and wherein said housing includes:

a first interior wall extent,

a second interior wall extent positioned a first distance from the first interior wall extent,

a third interior wall extent,

a fourth interior wall extent positioned a second distance from the third interior wall extent, and wherein the second distance is closer to the base of the housing than the first distance, and

wherein the first distance is less than 45% of the second distance;

a first plurality of tendons coupled to at least the index finger assembly and a second plurality of tendons coupled to the middle finger assembly, and wherein the first and second plurality of tendons are positioned between both: (i) the first and second interior wall extents, and (ii) the third and fourth interior wall extents;

a lower region spaced apart from the upper region and including a pair of legs; and,

a central region interconnecting the upper region and the lower region.

12. The humanoid robot of claim **11**, wherein the wrist assembly comprises:

a housing coupling component configured to couple to the housing;

a yaw component coupled to the housing coupling component and configured to provide side-to-side movement of the end effector;

a pitch component coupled to the yaw component and configured to provide up-and-down movement of the end effector; and

a base structure configured to couple to the forearm assembly.

13. The humanoid robot of claim **12**, wherein the pitch component includes a cable guide configured to route at least one tendon of the first or second plurality of tendons around a portion of the pitch component.

14. The humanoid robot of claim **11**, further comprising a carpal tunnel-like structure configured to guide the first or second plurality of tendons from the forearm assembly to the housing of the end effector, wherein the carpal tunnel-like structure is positioned between the first interior wall extent and the second interior wall extent.

15. The humanoid robot of claim **11**, further comprising a plurality of actuators positioned in the forearm assembly and coupled to the first or second plurality of tendons, wherein the forearm assembly includes a forearm frame having a tapered outer profile that is larger at a proximal end than at a distal end.

16. A humanoid robot, comprising:

an upper region including: (i) a head, (ii) a torso, (iii) an arm coupled to the torso and including: (a) a forearm assembly, (b) a wrist assembly coupled to the forearm assembly, and (c) an end effector coupled to the wrist assembly, and wherein wrist assembly includes:

a left base member,

a right base member,

a rotational axis that extends between the left and right base members,

a carpal tunnel-like structure coupled to the end effector and having an opening formed therein, and wherein a centroid is defined by said opening, and

wherein the centroid of the opening formed in the carpal tunnel-like structure is offset from the rotational axis, whereby said centroid does not lie on the rotational axis; and

a lower region spaced apart from the upper region and including a pair of legs; and,

a central region interconnecting the upper region and the lower region.

17. The humanoid robot of claim **16**, wherein the humanoid robot includes a non-tendon based actuator that is at least partially positioned between a proximal end of the forearm frame and a distal end of the forearm frame.

18. The humanoid robot of claim **16**, further comprising a first tendon that extends through the carpal tunnel-like structure to a portion of the end effector, and wherein a biasing member provides a biasing force on said tendon.

19. The humanoid robot of claim **16**, further comprising: (i) a first tendon that extends through the carpal tunnel-like structure and has a first total curvature in an uncurled state, and (ii) a second tendon that extends through the carpal tunnel-like structure and has a second total curvature that is less than the first total curvature in the uncurled state.

20. The humanoid robot of claim **16**, wherein an application of force or a frequency of use that is associated with the second tendon is greater than an application of force or a frequency of use associated with the first tendon.

21. The humanoid robot of claim **16**, further comprising a glove that substantially encases the end effector, the wrist assembly, and a portion of the forearm assembly.

22. The humanoid robot of claim **16**, wherein the end effector includes more than 19 degrees of freedom, but less than 24 degrees of freedom.

23. The humanoid robot of claim **22**, wherein the forearm assembly includes more than six motors, but fewer than 20 motors.

* * * * *